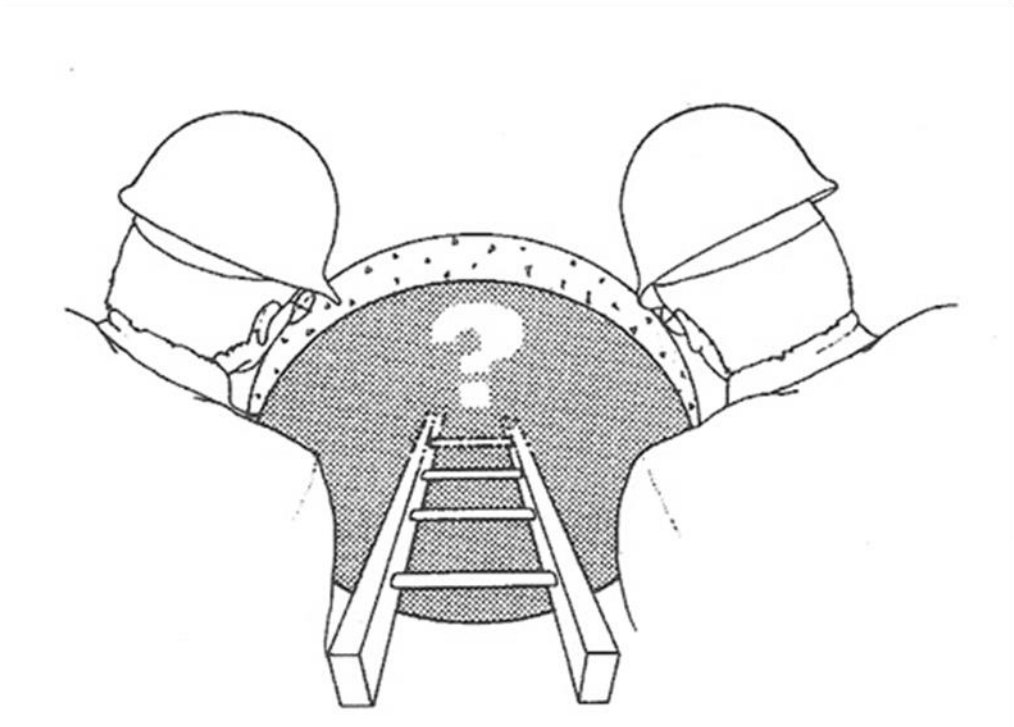

Confined

Space

Entry

AB OH&S compliant

First Edition (Version 3)

January 10, 2019

Saga Universal Training Corporation

Saga Universal Training Corp. is dedicated to reducing deaths caused by illness and injury. This manual follows the guidelines, principles and recommendations established by the Alberta Occupational Health and Safety Code 2017 (specific attention to Part 5 & 15) and internationally established and accepted safety standards including OSHA Standard 29 CFR Part 1910.146.

This training course is intended to supplement employer training programs. Readers should not assume that reviewing this manual alone constitutes complete Confined Space Entry training.

For further information contact:

Saga Universal Training Corporation

E: mail – info@sagatraining.ca

Web Page – www.sagatraining.ca

Saga Universal Training Corp. wishes to acknowledge the efforts of all the people who contributed to the writing, editing, and layout of this manual. It is our hope that this manual and the resulting training program will aide in the reduction of preventable injuries with the necessary knowledge, skills and confidence to understand hazards associated with both Restricted and Confined Spaces.

Table of Contents

Introduction

A confined space can be found at almost any work site. Crawl spaces, cramped mechanical rooms, mezzanine areas, plumbing or electrical vaults, cargo containers and attic spaces can all fit within the definition of a confined space, depending on the design, access and work activities taking place.

Confined spaces have a history of being dangerous places to work as hazards within them are often magnified. Limited access may be combined with poor ventilation, hazardous surroundings or energized equipment. Workers unknowingly entering an oxygen deficient or toxic atmosphere, can be fatal.

Working in a confined space is potentially one of the most dangerous of all workplace hazards. According to the New Zealand Department of Labour, working in a confined space is 150 times more dangerous than doing the same job outside the confined space.

In British Columbia, Work Safe BC (the Workers' Compensation Board) reports 18 deaths in confined spaces over a 15-year period. Some of the incidents resulted in the death or injury of several workers, including those trying to rescue the first worker in distress.

The majority of deaths in confined spaces are caused by hazardous atmospheres such as toxic gases or lack of oxygen. The remaining deaths are the result of physical hazards, where workers may be crushed, struck by falling objects, or buried in materials.

Legislation states that workers must not enter a confined space until hazards have been identified, workers are trained, and all procedures to eliminate or control the hazards are implemented. A confined space entry program for your workplace will describe what needs to be done before workers can safely enter and work in a confined space.

This course is designed to introduce the learner to the basic concepts, hazards, hazard control processes and safe work procedures associated with confined and restricted spaces.

Throughout this manual the various sections of the Alberta Occupational Health and Safety (OH&S) Act, Regulation and Code (2017) pertaining to confined and restricted spaces are referenced as background to each chapter and as supplemental information for the various subjects covered in this course.

It is expected that a workplace will apply this information as they create their own company specific confined space entry program.

Section 1: Training

This section outlines the Alberta OH&S Code requirement for workers to receive training for confined or restricted spaces.

Learning Objectives:

1. Become familiar with the requirement for workers to receive training for confined or restricted spaces
2. Become familiar with the minimum training requirements for confined or restricted spaces

Section 46(1) of the Alberta OH&S Code states that all workers who work within confined or restricted spaces and all workers with related duties e.g. rescue workers and tending workers or “safety watch” personnel, must receive training specific to confined or restricted spaces.

Every worker who works in a confined or restricted space must be able to recognize the hazards of working in the space and safely perform assigned duties. The rescue portion of this training may be part of a company or operation-wide emergency preparedness and response plan.

Training on its own does not ensure that a worker is competent to safely perform work. In addition to training, a worker must be adequately qualified and experienced to work safely. In cases where a worker is new to the job and does not have sufficient experience, the worker must be teamed up with and work under the direct supervision of a competent worker. (OH&S 46.2)

Requirements for worker training will vary depending on the tasks of different workers, but must at least include:

- Safe work procedures for entry into the confined space,
- Safe work procedures for working inside the confined space,
- Hazard recognition,
- Content of the entry permit,
- How to properly use the control measures in place to protect workers (engineering controls, administrative controls and personal protective equipment) and,
- What to do in the event of an emergency.

Section 2: Code of Practice

This section outlines the Alberta OH&S Code requirements as they pertain to Code of Practice.

Learning Objectives:

1. Become familiar with the Alberta OH&S requirements with respect to Code of Practice
2. Identify the 3 steps for preparing a confined space entry Code of Practice

A code of practice is a document that describes the procedures to be followed to ensure that workers safely perform work in a confined space. They may also be known as “Safe work Procedures”. Section 33 of the Alberta *OHS Act* requires a code of practice to include “*practical guidance on the requirements of the regulations or the adopted code applicable to the work site, safe working procedures in respect of the work site and other matters as required by a Director, the regulations or the adopted code*”.

Section 8 of the Alberta *OHS Regulation* requires that the code of practice be in writing and available to workers at the work site who are affected by it.

Part 5, Section 44 of the Alberta *OH&S Code* requires employers to have a code of practice governing the practices and procedures for workers entering and working in a confined space. The code of practice must include the subject matter of each section of Part 5, as well as hot work as described in section 169.

Section 13 of the *OHS Regulation* requires that workers affected by the code of practice be familiar with it before work in the confined space begins.

Workers should be consulted about the content of the code of practice as they often have the best understanding of the hazards involved in the work. The help of safety professionals such as industrial or occupational hygienists or engineers may be necessary if the situation is particularly complex.

A written confined space entry program should identify who has responsibilities for confined space entry and a general description of how confined spaces are dealt with in your workplace. The program should also identify who must be trained, the type of training required, and the frequency of training. This specific information is necessary to ensure that all workers understand the requirements for entering a confined space.

The code of practice must be maintained and periodically reviewed to ensure that its procedures are up-to-date and continue to reflect the work activities for which they were originally written. The code of practice must also identify all existing and potential confined space work locations at a work site so that workers can be

made aware of unexpected hazards and reminded that special safety requirements apply.

There are three basic steps in preparing a confined space entry code of practice:

1) Identify confined spaces at the work site.
2) Identify hazards in the confined spaces.
3) Develop the code of practice.

Section 3: Restricted and Confined Spaces Explained

This section defines the differences between Restricted Space and Confined Space and how to identify them.

Learning Objectives:

1. Become familiar with the definitions of Restricted Space and Confined Space
2. Become familiar with the Alberta OH&S Code requirements for Restricted and Confined Spaces
3. Become familiar with the process for identifying Restricted and Confined Spaces
4. Identify the four categories of hazards typically associated with Confined Spaces

The 2009 edition of the Alberta OHS Code introduced the concept of a “restricted space”. Restricted and confined spaces share certain common characteristics. They differ however in key areas that may help employers and workers to operate more safely and efficiently. A restricted space may also be thought of as a “non-permitted” confined space.

Restricted Spaces

Like confined spaces, restricted spaces have a limited means of entry and exit. Entry points may not be designed for easy walk in. other limitations include access by ladders or by stairwells that provide poor access because of steep slope, narrow width or extreme length. Physical obstructions such as bulkheads, collapsed material, or machinery may impede exit. Limited means of entry of exit can make escape difficult or rescue difficult.

A restricted space is an enclosed or partially enclosed space, not intended for continuous human occupancy that has a restricted, limited or impeded means of entry or exit because of its construction.

Examples of Restricted Spaces:

- an electrical or communication utility vault,
- a building crawl space,
- a trench with a temporary protective structure and,
- a deep excavation requiring ladder or lift access.

It can be thought of as a work area in which the only hazard is the difficulty of getting into or out of the space. All other hazards are either non-existent or have been eliminated or controlled as required by Part 2 of the Alberta OH&S Code.

It ***will not*** become hazardous to a worker entering it due to a hazardous atmosphere, potential for injury or illness, or activities outside the space having an effect upon workers inside the space.

Restricted spaces are therefore not subject to the permitting, atmosphere testing and tending worker requirements of a confined space. Employers and workers must be mindful that a restricted space can become a confined space if conditions or work practices change.

Despite being classified as a restricted space, the following requirements of Part 5 Confined Spaces continue to apply to workers entering a restricted space:

- a hazard assessment must be performed prior to entry — section 45;
- workers assigned duties related to the entry must be trained to recognize hazards and how to perform their duties in a safe and healthy manner — section 46,
- general safety requirements involving the use and availability of safety, personal protective, and emergency equipment, as well as a communication system — section 48;
- prevention of unauthorized persons entering a restricted space — section 50;
- protection of workers from hazards created by traffic in the area of the restricted space — section 51;
- workers cannot enter or remain in a restricted space unless an effective rescue can be carried out — section 55;
- a competent worker, designated by the employer, must be in communication with the worker(s) inside a restricted space — section 56 and,
- safe means of entry and exit must be available to all workers required to work in the restricted space — section 57.

Confined Spaces

As defined in section 1 of the Alberta OHS Code*,* a confined space is an enclosed or partially enclosed space that is not designed or intended for continuous human occupancy with a restricted, limited, or impeded means of entry or exit because of its construction and ***may*** become hazardous to a worker entering it because of:

a) an atmosphere that is or may be injurious by reason of oxygen deficiency or enrichment, flammability, explosivity, or toxicity,

b) a condition or changing set of circumstances within the space that present a potential for injury or illness, or

c) the potential or inherent characteristics of an activity which can produce adverse or harmful consequences within the space.

Confined spaces are not intended for continuous human occupancy. Even if confined space entry is done frequently at the work site, they are not sites of ongoing or regular work activity.

Examples of Confined Spaces:

- Tanks
- Pipelines
- Pits, sumps
- Boilers
- Sewers
- Vessels
- Vats
- Manure pits
- Manholes
- Kilns
- Storage bins
- Water reservoirs
- Vaults
- Double hulls
- Silos
- Pumping stations
- Other similar places

Why Enter a Confined Space?

Typical reasons for entering a confined space include:

a) cleaning to remove sludge and other waste materials;

b) inspecting process equipment;

c) maintenance such as abrasive blasting and applying surface coatings;

d) tapping, coating, wrapping and testing underground sewage, hydrocarbon, steam and water piping systems;

e) installing, inspecting, repairing, and replacing, valves, piping, pumps, motors, etc. in below ground pits and vaults;

f) checking and reading meters, gauges, dials, charts and other measuring instruments and,

g) rescue of workers who are injured or overcome while inside the confined space.

In addition to other hazards, confined spaces may have limited means of entry and exit. This would not only make escape and rescue difficult but could also restrict natural ventilation.

Figure1.1 shows a flowchart that helps to determine if the space is a confined space or a restricted space.

Most confined spaces are designed to hold substances such as liquids, gases and loose material, or to house equipment.

Though they come in many sizes and shapes, most can be classified in one of two ways:

1. spaces that are open-topped and have depth including pits, wells, vats, hoppers, bins, degreasers, and kettles; and
2. spaces with narrow openings including pipes, tunnels, silos, casings, and sewers.

Confined spaces may have poor natural ventilation and contain, or may contain, an unsafe atmosphere. Poor ventilation can be the result of unpredictable or limited air movement or air currents that draw contaminated air into the space.

Unsafe atmospheres are most often associated with spaces that are fully enclosed such as tanks and vats. However, pits, trenches and vessels that are open topped can also contain an unsafe atmosphere. The unsafe atmosphere can result from the entry of a gas that is heavier than air, the release of gases from wastes at the bottom of the space being disturbed, or the presence of a

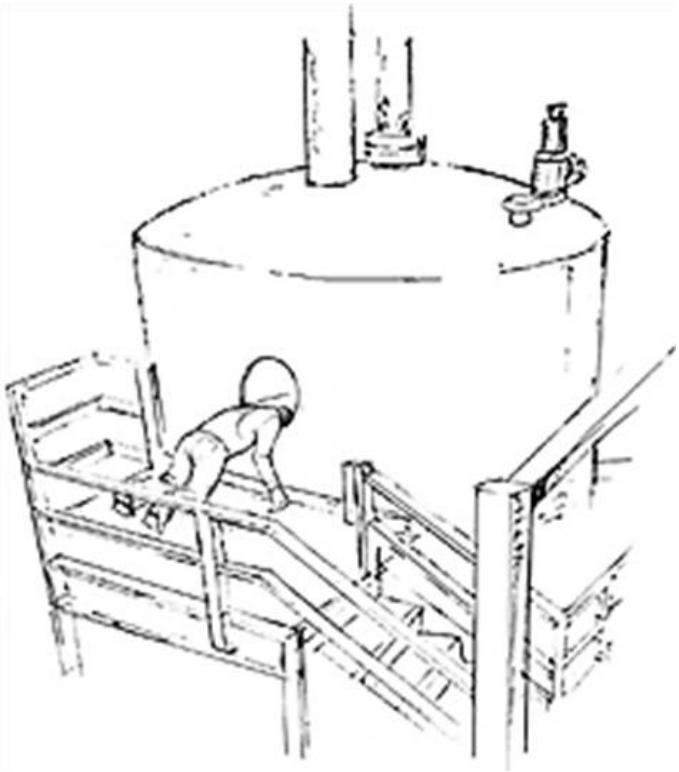

layer of gas above the space that prevents fresh air from moving into it.

A worker is considered to have “entered” a confined space when his or her breathing zone crosses the plane of the confined space access.

.Figure 1.1: **Confined Space?**

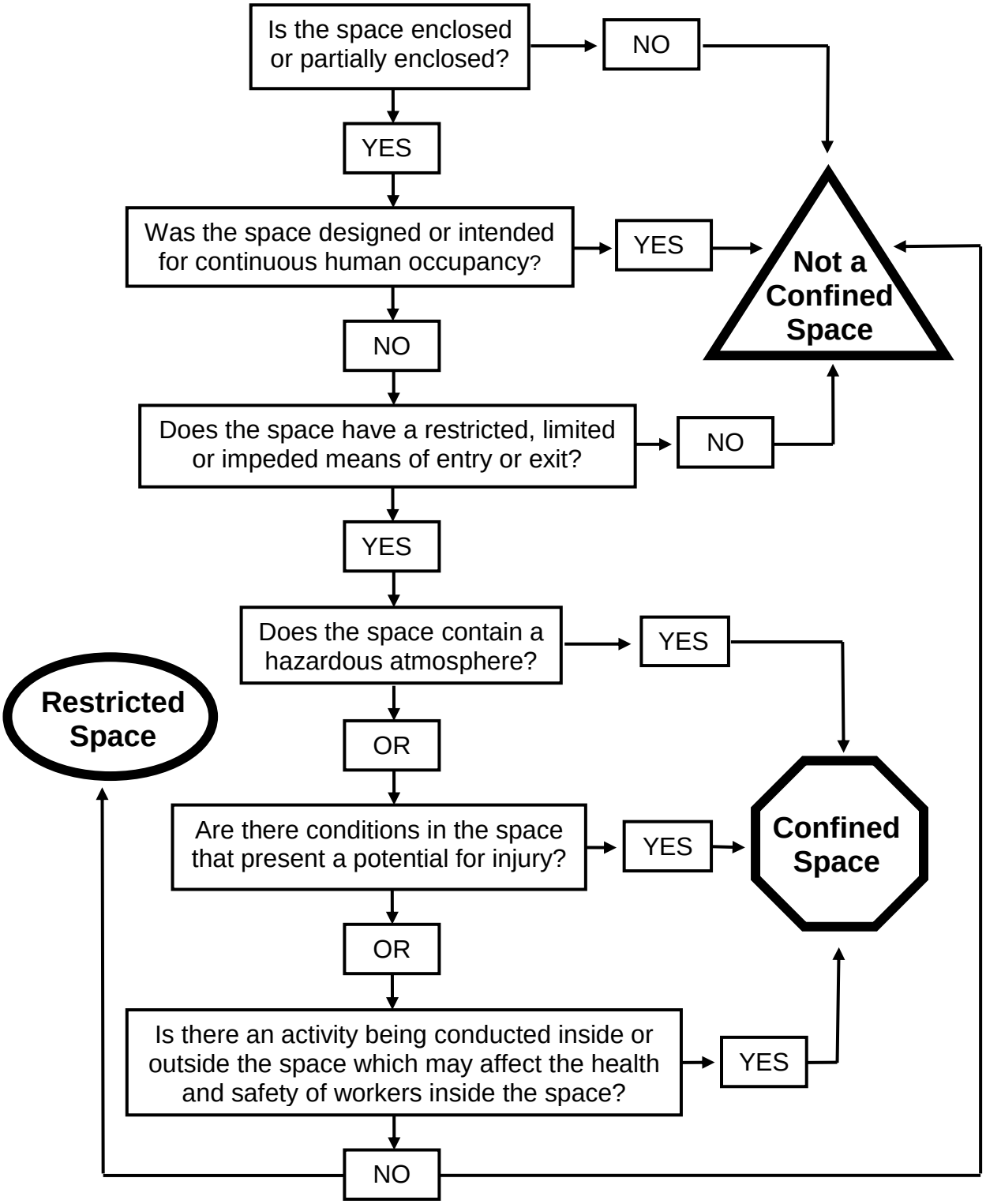

Section 4: Hazards

This section covers the atmospheric hazards which may be located within a Confined Space.

<u>Learning Objectives:</u>

1. Become familiar with the elements which can cause atmospheric contamination
2. Become familiar with the rating system for atmospheric hazards
3. Become familiar with the common causes of oxygen deficiency in a Confined Space
4. Become familiar with the characteristics of the toxic gases commonly found in a Confined Space
5. Understand Exposure Limits and how they apply to Confined Spaces
6. Identify the three elements which can create a fire or an explosion
7. Become familiar the concept of normal and oxygen enriched air
8. Become familiar with the concept of upper and lower flammable limits as it applies to gases and vapours
9. Become familiar with the different types of fuel
10. Become familiar with the different types of ignition sources
11. Become familiar the different types of safety hazards in a work environment
12. Become familiar with pre-existing conditions and changing conditions or activities that can make a confined space unsafe
13. Become familiar with some of the some of the human factors which could create hazards while working in a confined space
14. Become familiar with the elements contained within a Confined Space Hazards Assessment Work Sheet

The atmosphere in a confined space may be hazardous for several reasons. The air may have too little or too much oxygen, or the atmosphere may be toxic or explosive.

Confined spaces with hazardous atmospheres could also have a variety of physical hazards.

Hazards in confined spaces generally fall within four categories:

- Atmospheric
- Safety
- Work-related
- Human factors

In assessing the hazards that workers are likely to be exposed to, the requirements of Part 2 of the OHS Code – Hazard Assessment, Elimination and Control – must be met.

The hazard assessment needs to be revised whenever there is evidence to indicate that it is no longer valid and when any of the conditions listed in subsection 7(4) as outlined below of the OHS Code is met.

An employer must ensure that the hazard assessment is repeated:

a) At reasonably practicable intervals to prevent the development of unsafe and unhealthy working conditions,
b) when a new work process is introduced,
c) when a work process or operation changes, or
d) before the construction of significant additions or alterations to a work site.

Atmospheric Hazards

Confined spaces can become unsafe as a result of atmospheric contamination by:

- toxic substance in a concentration of a substance above the regulated exposure or “safe” limits. For example:
  - More than 25 ppm of Ammonia
  - More than 5000 ppm of Carbon dioxide
  - More than 25 ppm of Carbon monoxide
  - More than 10 ppm of Hydrogen sulphide
  - More than 2 ppm Sulphur dioxide
  - More than 0.4 mg per cubic metre of coal dust
- oxygen deficiency or excess
  - Less than 19.5% oxygen by volume
  - More than 23.0 percent oxygen by volume
- or flammable vapours not more than 20% of their lower flammable or explosive limits. For example:
  - Methane 5% - 15% (20% of LEL = 1%)
  - H2S 4% - 46% (20% of LEL = .8%)
  - Propane 2.1% - 9% (20% of LEL = .42%)

    - Butane 1.8% - 8.4 (20% of LEL = .36%)
    - Ethane 2.9% - 12.4% (20% of LEL = .58%)
    - Pentane 1.4% - 7.8% (20% of LEL = .28%)

- explosive dusts and mists. For example:
    - Coal dust
    - Grain dust
    - Aerosols

- biological contaminants. For example:
    - Animal droppings
    - Mould

The atmosphere hazard of a confined space must be determined by a qualified person after considering the design, construction, and use of the confined space, the work activities to be performed, and all required engineering controls.

Atmospheric hazards are generally hazard-rated as: **HIGH, MODERATE**, or **LOW.**

High-Hazard Atmosphere

A high hazard atmosphere is one that may expose a worker to risk of death, injury, or acute illness, or otherwise impair a worker's ability to escape unaided from a confined space if the ventilation system or respirator fails.

Moderate-Hazard Atmosphere

A moderate hazard atmosphere is one that is not clean, has breathable air but is not likely to impair a worker's ability to escape unaided from a confined space if the ventilation system or respirator fails.

Low-Hazard Atmosphere

A low hazard atmosphere is one that is shown by pre-entry testing or is otherwise known to contain clean, breathable air immediately prior to entry into a confined space, and that is not likely to change during the work activity.

Oxygen content in the air within the confined space can be reduced by welding or brazing and absorption by grain or soils or bacteria. Inert gases such as carbon dioxide or nitrogen can dilute or displace the air in the confined space. During

purging, an inert gas such as nitrogen is deliberately pumped into a confined space to force out (purge) flammable or explosive vapours or gases. The inert gas is usually replaced with fresh air before the space is entered.

Asphyxiant gas – physiologically inert gases can dilute or displace atmospheric oxygen below acceptable levels. During a process known as purging, inert gases are deliberately pumped into a confined space to force out flammable or explosive atmospheres.

Common examples of inert gases include:

- carbon dioxide
- ethane
- helium
- hydrogen
- methane
- nitrogen

Cleaning, painting or welding may produce dangerous vapours or fumes which can be health, fire and explosion hazards. Toxic gases such as hydrogen sulphide may leak into the space from gas pockets underground. Carbon monoxide may be generated or collect in the space due to burning material or the use of an internal combustion engine. Methane may be created by rotting plant material in the space.

Oxygen: Insufficient or Excessive?

Lack of oxygen is a leading cause of death among workers entering confined spaces. Low oxygen levels cannot be detected by sight or smell. You must test the air for this hazardous condition. A very low level of oxygen can damage the brain and cause the heart to stop after a few minutes.

Air contains 20.9% oxygen. Working in an atmosphere with oxygen levels between 14% and 17% can produce impaired judgment, dizziness, fatigue, and collapse. In oxygen levels lower than this, one breath could have so little oxygen that your muscles can’t respond, and you won’t have the strength to escape even if you are still conscious.

Workers must not enter a confined space containing less than 19.5% oxygen without taking appropriate precautions, including the use of supplied-air respirators.

Common causes of oxygen deficiency in a confined space:

- Oxygen is used up when metals rust.
- Oxygen is used up during combustion — for example, by propane space heaters, during cutting or welding, and by internal combustion engines.

- Oxygen can be replaced by other gases — for example, welding gases or gases forced into the space to prevention corrosion.
- Micro-organisms use up oxygen — for example, in sewer lines and fermentation vessels.
- Inert gases can dilute or displace the oxygen in the confined space.
- Cleaning, painting or welding may produce dangerous vapours or fumes which can be health, fire and explosion hazards.
- Toxic gases such as hydrogen sulphide may leak into the space from gas pockets underground.
- Carbon monoxide may be generated or collect in the space due to burning material or the use of an internal combustion engine.
- Methane may be created by rotting plant material in the space.

Too much oxygen is not as common a hazard as low oxygen, but it is also dangerous. Too much oxygen greatly increases the risk of fire or explosion in the confined space. Materials that would not normally catch fire or burn in normal air may do so extremely quickly and easily where there is a high level of oxygen.

The only way to know how much oxygen is present in a confined space is to use an oxygen monitor. The monitor must be in good working order, properly maintained and calibrated and set to alarm at the right level. Someone trained to use the monitor must test the air before anyone enters the confined space.

Oxygen Concentrations	Effects
23% and greater	Increased combustibility of materials.
21%	Ideal
20.9%	Normal
19.5%	Minimum for safe working condition.
16%	Rapid pulse, lack of coordination, impaired thinking.
12%	Extremely impaired judgment and coordination. Heart damage.
Less than 10%	Nausea, vomiting, unconsciousness, death.

Asphyxiant gas – physiologically inert gases can dilute or displace atmospheric oxygen below the level required for normal human functioning.

During a process known as purging, an inert gas such as nitrogen is deliberately pumped into a confined space to purge or force out flammable or explosive atmospheres from a confined space.

Examples of inert gases include:

- carbon dioxide
- ethane
- helium
- hydrogen
- methane
- nitrogen

Toxic Gases or Vapours

Contaminants in the air can result in an atmosphere that is toxic to workers and may result in injury or death. These gases/vapours can result from known materials in the work area that have not been adequately ventilated. Or they can result from gradual release from sludge or scale inside the confined space.

Liquids may produce hazardous atmospheres if they evaporate — for example, liquid fuel in a tank producing vapours. Dangerous conditions can develop when pockets of gas in waste materials are disturbed during cleaning. For example, an organic material such as manure sludge can release the toxic gas hydrogen sulfide when manure pits are cleaned out. Rotting pulp in tanks also creates hydrogen sulfide. If grains in silos ferment, they use up oxygen and produce deadly gases.

The concentration of the substances inside the confined space must be determined with a recently calibrated air monitor set up with the correct sensors.

Such an air monitor may sound an alarm that will alert the worker before the allowable exposure limit is reached.

In most cases, mechanical ventilation such as fans must be used to ventilate the space, bringing in clean outside air. Additionally, the harmful substance must be eliminated wherever practicable. Air testing and ventilation are the best ways to ensure that workers are not placed at risk from hazardous atmospheres.

At certain concentrations, some substances become immediately dangerous to life and health (IDLH). At these levels, even a brief exposure can cause permanent health effects such as brain, heart, or lung damage. Or the substance may make workers dizzy or unconscious so that they cannot escape from the confined space. Some substances have very low IDLH levels. For example, the IDLH level for hydrogen sulfide is only 100 ppm (parts per million).

Activities that may lead to the release of harmful substances into the air include grinding, de-scaling, insulation removal, metal spray applications, rubber lining, painting, fibre-glassing, cutting, welding, and the use of internal combustion engines. Cleaning agents may be toxic, may react with tank residues, or may release a deadly gas from porous surfaces inside the space.

Vapour Density

Vapour density is the weight of a gas (vapour) compared to air. Air (or hydrogen in some cases) is used as the medium and has a vapour density equal to one (1). If the gas has a vapour density **greater than** one (1) it will sink in air. Propane for example, has a vapour density of 1.5; therefore, propane will normally sink to the ground and seek low-lying areas. Hence the reason why propane powered vehicles are not allowed in underground parking garages. If the vapour density is **less than** one (1) the vapour will rise in air. An example is methane with a vapour density of 0.6.

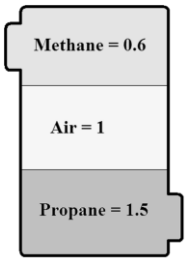

Characteristics of Common Gases

Material	Flashpoint	Combustible Range	Physical Description	MAIN Danger	8 hr. TWA	IDLH	Density (Air =1)
Carbon Dioxide (CO^2)	N/A	Non-Combustible	Colourless, Odourless	Displaces oxygen. Toxic	5,000 ppm	50,000 ppm	1.5
Carbon Monoxide (CO)	-191 ˚C	12.5 – 75%	Colourless Odourless	Toxic — asphyxiant	25 ppm	1,500 ppm	0.97
Chlorine (Cl^2)	N/A	Non-Combustible	Greenish yellow colour; sharp pungent odour	Toxic — lung and eye irritant.	0.5 ppm	10 ppm	2.5
Diesel Fuel	37.8 ˚C	1 – 6%	Clear to yellow liquid	Flammable	15 ppm	600 ppm	.9
Unleaded Gasoline	-65 ˚C	1 – 7.6%	Colourless; sweet odour	Fire and explosion. Toxic – nervous system depressant	300 ppm	1100 ppm	3.5
Hydrogen Sulphide (H^2S)	-82 ˚C	4 – 46%	Colourless; Sulfurous odour	Flammable Poisonous Caustic	10 ppm	100 ppm	1.2
Methane (CH^4)	-188 ˚C	5 – 15%	Colourless Odourless	Fire and explosion	O^2 at 19.5%	20% of LEL	0.6
Nitrogen (N^2)	N/A	Non-Combustible	Colourless Odourless	Displaces oxygen	O^2 at 19.5%	Displaces oxygen	0.97
Propane	-40 ˚C	2.2 – 9.5%	Colourless Cabbage odour	Flammable	1,000 ppm	20% of LEL	1.5
Sulfur Dioxide (SO^2)	N/A	N/A	Colourless Sulfurous, suffocating odour	Toxic – severe lung irritant	2 ppm	100 ppm	2.2
Oxygen (O^2)	N/A	Enhances combustion.	Colourless Odourless	L - asphyxiant H – enhances combustion	N/A	<19.5% >22%	1.2

Refer to company SDS for specific information.

Although many contaminants in the air may be toxic, they are considered acceptable by some government regulations as long as they remain below identified levels of concentration.

Schedule 1 of the Alberta OH&S Code identifies the acceptable levels in Alberta. These are known as *Occupational Exposure Limits* **(OEL's),** *Threshold Limit Values* **(TLV's),** or *Permissible Exposure Limits* **(PEL).**

- **Time Weighted Average (TWA)** is based on the average exposure to a contaminant or condition to which workers may be exposed without adverse effect over a period such as in an 8-hour day or 40-hour week. (Without wearing respiratory protection)

- **15 Minute Time Weighted Average (Short Term Exposure Limit – STEL)** is the employee's 15-minute time weighted average exposure which shall not be exceeded at any time during a work day.

- **Ceiling Exposure Limit** is the maximum allowable concentration of a controlled substance as listed by legislation.

Before entering a confined space that may contain a hazardous atmosphere e.g. oxygen deficient or containing toxic or explosive substances, pre-entry atmospheric testing must be done to ensure that levels of oxygen are adequate, and that any hazardous substance is identified. Competent workers must conduct the testing with suitable test equipment that has been properly calibrated and is used in accordance with the manufacturer's specifications. It is particularly important for the individuals performing these tests to understand the limitations of the test equipment.

The worker needs to ensure adequate levels of Personal Protective Equipment is used to protect them from what may be discovered!

Explosive Gases or Vapours

Three elements are necessary for a fire or explosion to occur: oxygen, flammable material (fuel), and an ignition source.

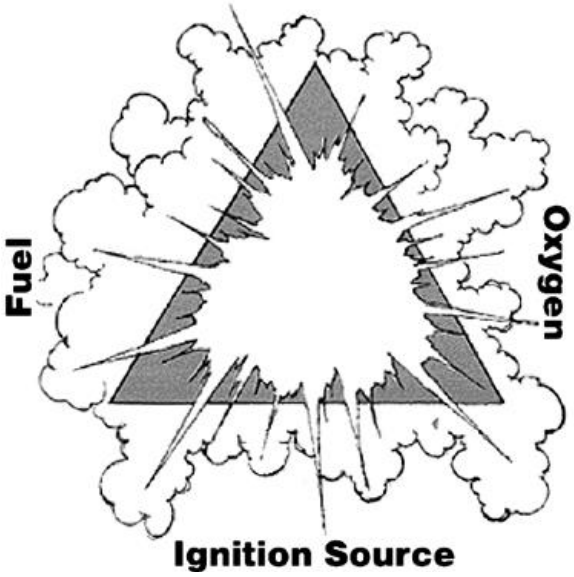

Oxygen

Air normally contains 20.9% oxygen, enough oxygen for a fire. However, a higher level of oxygen increases the likelihood of material burning.

Air is considered oxygen-enriched at levels above 23%.

Enrichment can be caused by improper isolation of oxygen lines, ventilation of the space with oxygen instead of air, or leaks from welding equipment.

Fuel

Fires and explosions in confined spaces are often caused by gases or vapours igniting. Coal dust and grain dusts may explode when a certain level of dust in the air is reached. This is known as the combustible range of a fuel.

Combustible atmospheres are those in which a fuel is present in quantities sufficient to ignite. These concentrations define the “Combustible Range”, otherwise referred to as the “Flammable or Explosive Range”.

These ranges vary from one material to another. The lower limit (LEL or LFL) is the lowest concentration of a gas or vapour that will support combustion and the upper limit (UEL or UFL) is the highest concentration of a gas or vapour that will support combustion.

Concentrations of vapours in the atmosphere outside these limits are either too rich or too lean, and therefore will not ignite.

NOTE: Two or more chemicals may react with each other and become explosive.

Containers of fuels such as gasoline and propane should not be taken into a confined space as fuel can easily burn or explode.

Other common substances that can cause explosions or fires in confined spaces:

- Acetylene gas from leaking welding equipment.
- Methane gas and hydrogen sulfide gas produced by rotting organic wastes in sewers or tanks.
- Hydrogen gas produced by contact between aluminum or galvanized metals and corrosive liquids.
- Grain dusts, coal dust.
- Solvents such as acetone, ethanol, toluene, turpentine, and xylene, which may have been introduced into the space through spills or by improper use or disposal.

Ignition

Sources include:

- Open flames
- Sparks from metal impact
- Welding arcs
- Arcing of electrical motors
- Hot surfaces
- Discharge of static electricity
- Lightning
- Chemical reaction

Many processes can generate static charge, including steam cleaning, purging, and ventilation procedures. To reduce the risks from these ignition sources, use non-sparking tools and ensure all equipment is bonded or grounded properly.

Safety Hazards

These are related to:

- Entry/exit points (e.g. very small openings, steep ladders, exits at height that could cause falls, exits into traffic or machinery hazard areas)
- Machinery (the worker may be trapped or crushed by drive belts augers, mixers, agitators, conveyor belts, etc.)
- Piping and distribution systems (e.g. steam lines, liquid distribution lines)
- Residual chemicals (e.g. material in a storage tank that is not completely emptied or purged, dry materials that may remain stuck to surfaces)
- Engulfment (workers can be trapped or buried by dry bulk materials such as grain, sand, flour, fertilizer and sawdust)
- Uncontrolled introduction of steam, water or other gas or liquid
- Electricity (e.g. unguarded energized electrical equipment, motor control centres)
- Visibility (the space may be improperly or inadequately lit.)
- Physical obstacles (e.g. cross bracing, baffle plates, piping)
- Walking or working surfaces (e.g. the surfaces may be hot or slippery)
- Traffic around the confined space
- Temperature extremes (e.g. working in freezers or boilers, areas with steam or heat distribution pipes)
- Humidity
- Noise (Noise levels can be up to 10 times greater than the same source placed outdoors.)
- Vibration (e.g. equipment or tools may cause vibration, such as impact hammers, motors, etc.)
- Radiation (e.g. ultraviolet or infrared sources from welding, cutting or brazing, x-ray systems used for inspection and monitoring)

Work Related Hazards

Some confined spaces become unsafe as a result of the conditions or work that is done inside them. Examples of conditions that can make a confined space unsafe are:

a) manholes in contaminated ground e.g. near a leaking underground gasoline storage tank, into which poisonous or flammable gases can seep;

b) manholes, pits or trenches connected to sewers, in which there can be a build-up of flammable and/or poisonous gases and/or insufficient oxygen in the air;

c) tanks or pits containing sludge's and other residues which, if disturbed, may partially fill the confined space with dangerous gases; and

d) confined spaces that contain rotting vegetation, rusting metal work, and similar natural oxidation processes that create an oxygen-deficient atmosphere.

Some examples of confined spaces in which changing conditions or activities in progress can make the space unsafe are:

a) some painting work and the application of certain adhesives, cleaners and liquids such as paint thinners. These can produce dangerous amounts of solvent vapour, which can cause dizziness and impair judgment. Such solvents are often flammable so there is an accompanying risk of fire;

b) welding activities may generate toxic gases or vapours and,

c) the use of gasoline or diesel engines can lead to the build-up of poisonous carbon monoxide gas. There is also a risk of fire resulting from leaks and,

d) introduction of hot work.

In some cases, a confined space can become unsafe because of the inherent characteristics of activities that occur outside the space. Examples include:

- the filling/emptying of an adjacent compartment/tank;
- weather changes, such as thunderstorms i.e. a drop in barometric pressure, lightning, etc.;
- heat of the day increasing vapourization and affecting personnel i.e. heat exhaustion and,
- pipelines entering the confined space may contain hazardous materials.

Human Factor Hazards

Some workers may have phobias (e.g. claustrophobia, fear of heights) that could interfere with their ability to work in a confined space. The use of bulky personal protective equipment (especially respirators) can also cause heat stress and fatigue.

The physical condition of workers may also be a factor in cases where there are temperature extremes, or the work is physically demanding. As a result, some workers may not be suited for work in confined spaces.

The employer should consider the physical condition of the workers during the hazard assessment process. Fitness-to-work assessments should be done by a qualified professional to ensure it is safe for workers to perform work in a confined space.

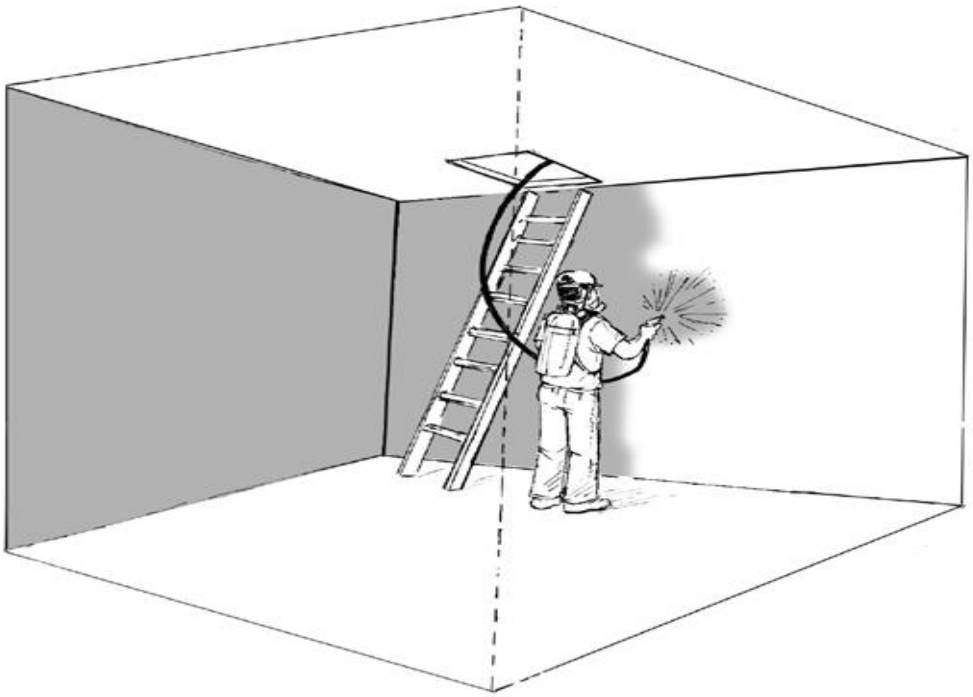

Figure 1: Confined Space Hazards Assessment Work Sheet

Entry date: _____

Location of work: _____

Description of tasks to be completed: _____

_____

_____

_____

Atmospheric Hazards	**Yes**	**No**
Explosive atmosphere (gases, vapours, fine dusts)	❒	❒
Oxygen deficiency	❒	❒
Oxygen enrichment	❒	❒
Toxic gases or vapours	❒	❒
Dusts, mists, fumes	❒	❒
Smoke	❒	❒
Biological agents	❒	❒
Other	❒	❒

If yes to 1 or more of the above, specify atmospheric hazards:

_____

_____

_____

Safety Hazards		
Entry/Exit	❒	❒
Small/narrow openings	❒	❒
Steep openings	❒	❒
Entry/Exit at height	❒	❒
Angled openings	❒	❒

Exits into traffic or machinery	❒	❒
Machinery/mechanical equipment	❒	❒
Piping and distribution systems	❒	❒
Residual chemicals or materials	❒	❒
Pressure systems	❒	❒
Electrical hazards	❒	❒
Poor Visibility	❒	❒
Physical obstacles	❒	❒
Walking/working surfaces	❒	❒
Temperature extremes	❒	❒
Heat stress	❒	❒
Cold stress	❒	❒
Humidity	❒	❒
Noise	❒	❒
Vibration	❒	❒
Radiation	❒	❒
Type: _____		
Other	❒	❒
Type: _____		

Work Related Hazards

Hot Work	❒	❒
Type: _____		
Sandblasting	❒	❒
Bonding operations	❒	❒

Grinding	❒	❒
Cutting	❒	❒
Use of solvents, corrosive chemicals or cleaners	❒	❒
Use of paint/spray painting	❒	❒
Repairs	❒	❒

If yes, describe_____

_____

Installation	❒	❒

If yes, describe_____

_____

Inspection	❒	❒

If yes, describe_____

_____

Emergency rescue/first aid	❒	❒
Other	❒	❒

Type: _____

Human Factors

Comments:

_____

_____

_____

_____

_____

_____

Section 5: Testing the Atmosphere

This section discusses atmospheric testing; its' various elements and how it should be conducted.

Learning Objectives:

1. Become familiar with five elements that should be included in the written procedures for atmospheric testing
2. Become familiar with what to test for
3. Become familiar with when to test
4. Become familiar with the process for testing for initial conditions
5. Understand what is meant by the phrase continuous monitoring and when it should be performed
6. Become familiar with proper test procedures and equipment
7. Become familiar with the features to consider when selecting monitoring equipment
8. Understand the term calibration and in general terms, how a calibration process is performed

Before a worker enters a confined space, the atmosphere must be tested (Section 52 OH&S Code). This testing should be done in accordance with the written procedures developed by the employer.

The procedures should include information on:

- Testing initial conditions.
- Continuous monitoring.
- Proper test procedures and equipment.
- What to test for (oxygen, explosive conditions, and contaminants).
- When and where to test.

What to Test For

Before entry into a confined space, test for the following:

- **Oxygen level** (measured as a percentage of oxygen in the air)
- **Explosive conditions and flammable gases** (measured as a percentage of the LEL or as mg/m^3)
- **Contaminants that have been identified in the hazard assessment** (measured as the concentration in parts per million, or ppm or as mg/m^3)

The competent tester will know what tests are required and the allowable limits for these contaminants.

Many testing devices test several gases and vapours simultaneously. If the sensors on the monitor do not test for all the contaminants identified in the hazard assessment, then additional monitoring equipment appropriate for the contaminants and conditions must be used.

When to Test

Test the atmosphere:

- Before opening access to the space, if possible.
- If not possible, immediately after the space has been opened. (Use appropriate PPE)
- At hazard points during line disconnect or other isolation procedures.
- Immediately before initial entry into the confined space (within 20 minutes of entry).
- While workers are inside the space, at close enough intervals to ensure the continuing safety of workers.
- Before workers re-enter a space after it has been vacated for more than 20 minutes.
- Before and after procedures such as cleaning and purging.
- When there is a change in work.
- During work that causes contaminants to be generated in the work space.
- If a change of atmosphere is suspected or it is possible that control measures cannot or do not ensure a safe atmosphere.
- If a hazardous substance is accidentally released into the confined space If a worker indicates symptoms of exposure to air contaminants, for example a “light-headed” feeling, headache, a choking or coughing feeling, nausea, burning or fogging eyes.
- If ventilation fans have been shut down for any reason.

Testing Initial Conditions

As previously discussed, confined spaces may contain explosive, toxic, or oxygen-deficient atmospheres. Whenever possible, test the atmosphere before opening hatches or starting ventilation. This will help identify whether or not an explosive atmosphere exists or help prevent the venting of a hazardous atmosphere out of the space into areas occupied by workers. Where there is an explosive gas just under the surface of the cover, creating a spark could cause an explosion.

Competent workers must conduct the testing with suitable test equipment that has been properly calibrated and is used in accordance with the manufacturer's specifications (OH&S Code Sec. 52-2). It is particularly important for the individuals performing these tests to understand the limitations of the test equipment.

Even if it is not possible to test before opening the space, do pre-entry testing before any ventilation is applied to the space. This provides a record of:

- Conditions and the contaminants that normally exist in the space.
- The amount of ventilation required for the space.
- The extent to which the air inside the space is hazardous to workers.

Pre-entry testing is testing the atmosphere with a gas detector before workers enter a confined space. Pre-entry testing is often conducted more than once. It should be done before the space is ventilated and not more than 20 minutes before a worker enters the space. The results must be recorded (OH&S Code Sec. 52-6) and posted at all points of entry to the confined space (whether or not a continuous monitor or single-test device is used). Refer to employer's code of practice for information on what to test for and when to test.

Testing must be conducted to verify that the required precautions have been effective at controlling the identified hazards and that the atmosphere is safe for a worker to enter a confined space.

Continuous Monitoring

Situations may arise in which the atmosphere within a confined space, or the concentration of an airborne substance(s) within a confined space, can change unpredictably. If the hazard assessment identifies the potential for such a situation, then continuous atmospheric monitoring is required.

The employer must ensure (OH&S Code Sec. 52-3) that as often as necessary after the first time a worker enters the confined space, a competent worker

(a) performs the tests specified in subsection (1), and

(b) identifies and records any additional hazards.

The employer must ensure that if there is a potential for the atmosphere to change unpredictably after a worker enters the confined space, the atmosphere is continuously monitored in accordance with subsection (2).

A continuous monitor should be used whenever practicable to ensure the safety of workers. The monitor will typically provide continuous readings of the oxygen level and level of any explosive gases or vapours, if present. In addition, many monitors have the capability of being configured to test for other harmful gases that may be present, such as carbon monoxide (CO) or hydrogen sulphide (H2S). The monitor provides an alarm if any of these go beyond preset limits.

Some contaminants cannot be monitored using a continuous monitor. The concentration of these contaminants must be monitored using other devices described in the written work procedure.

A properly calibrated and maintained continuous monitor will register any change in the atmosphere and an alarm will sound at preset limits. If a wide enough margin of safety is applied to the alarm settings, the alarm can be used to indicate that workers must leave the space. Alarm level settings should be determined by a qualified and competent person.

It is good practice to use a continuous monitor if an atmosphere in excess of 20% of the lower explosive limit (LEL) could develop. Note that some sources use lower flammability level (LFL) instead of LEL; the terms are interchangeable.

The Code of Practice should ensure appropriate monitoring equipment is used for contaminants whose concentrations could exceed the protection provided by respirators. If tests identify additional hazards, the employer must deal with the identified hazards in accordance with the Code (OH&S Sec. 52.4).

Proper Test Procedures and Equipment

Testing must be conducted in accordance with written procedures and the following requirements:

- Each confined space atmosphere test must be carried out by an adequately trained worker.
- Use reliable equipment that has been properly serviced, calibrated, bump tested, and maintained according to the manufacturer's instructions.
- It is very important to understand the limitations of the test equipment.
- Keep a testing record that shows the
    - Date and time of the test
    - Tester's initials
    - Concentrations of vapours, gases, or other conditions
    - Test results should be posted without delay at all points of entry to the confined space.

The monitor should be tested first in clean outside air. If the reading is above or below 20.9% oxygen, there may be a problem with the oxygen sensor or with the calibration of the unit. Do not use this monitor for testing inside the confined space, and do not enter the confined space until a properly calibrated monitor is used. In conditions of high humidity, refer to the manufacturer's instructions.

Qualifications of Testers

A trained worker, as identified in the written work procedures, may test the atmosphere in the confined space.

Training should include:

- Reliability and limitations of the testing equipment.
- Requirement to use calibrated testing equipment.
- The manufacturer's instructions for use and maintenance.
- Sampling techniques and methods to test the atmosphere (for example, use of a pump device and a probe to determine the concentration of contaminants from outside the space, and ensuring enough testing time for a continuous monitor to register an accurate reading).
- Allowable limits of exposure for each contaminant.
- How to use the monitor to obtain and interpret readings from a continuous monitor (for example, when to take peak readings).
- Substance-specific monitoring equipment, when used.

Selection of Monitoring Equipment

Recommended features include:

- Accurate, reliable, and specific readouts.
- Immediate readout capability.
- Remote sensors or extension tubes to minimize the need for the tester to enter the confined space.
- Continuous monitoring capability, with an alarm for use in spaces where a hazardous atmosphere could develop after entry.
- Continuous monitor with data-logging capability to record conditions in the space.
- Capability of obtaining peak readings.

Calibration of Equipment

The employer must ensure that the testing required by subsection (1) is performed using calibrated test instruments appropriate for the atmosphere being tested and the instruments are used in accordance with the manufacturer's specifications. (OH&S Code 52.2)

Calibration refers to setting the test instrument to a standard to make sure it is reading accurately through a range of concentrations. Calibration is done by comparing the instrument's reading to a range of known concentrations and adjusting the monitor to read accurately.

The manufacturer's instructions specify the calibration requirements, including calibration frequency and "bump" tests. A bump test uses a known concentration to verify that the instrument is responding correctly to a known concentration. Monitoring equipment must be calibrated according to the frequency specified in the manufacturer's instructions and must be bump tested or spanned as required prior to use. For example, manufacturers may require calibration every 30 days and bump testing daily at the start of the shift.

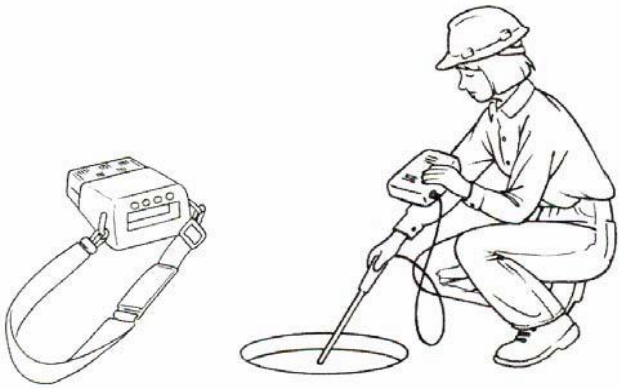

Section 6: Hazard Control

This section discusses how to evaluate and identify proper hazard controls, the control of atmospheric hazards in a confined space and the methods used to achieve control, the process of isolation; when it should be used and how it used to control hazards and hazardous energy within a confined space and, the general requirements for respiratory personal protective equipment in relation to confined spaces.

Learning Objectives:

1. Become familiar with why and how a hazard assessment is performed
2. Identify the differences between the control methods of venting and ventilation
3. Become familiar with the process of mechanical ventilation
4. Identify the differences between local exhaust ventilation and general ventilation
5. Become familiar with the two types of air moving devices and when they should be used
6. Become familiar with the process of natural ventilation
7. Become familiar with the process of purging
8. Become familiar with the process of inerting
9. Identify the different types of common atmospheric hazards
10. Become familiar with the three elements required for a fire or an explosion to occur
11. Understand how to prevent oxygen enrichment
12. Understand how to control flammable substances
13. Understand how to control sources of ignition
14. Understand the meaning of the term isolation
15. Understand the purpose of isolation as it pertains to controlling hazards in a confined space
16. Become familiar with the key items that should be included in a written isolation procedure
17. Identify the various types of hazardous energy
18. Understand the meaning of the term lockout
19. Become familiar with the lockout process
20. Understand the process of blinding
21. Understand the process of blanking
22. Understand the process of double block and bleed
23. Understand the differences between pneumatic, grounded and double insulated tools Understand the general requirements for PPE
24. Identify the circumstances under which respirators are to be used
25. Identify and understand the differences between the two common types of breathing apparatus

For every confined space, the employer must evaluate each hazard that workers may be exposed to. For each hazard, the employer must identify the controls used to protect workers. For example, inerting or purging may be used to displace flammable or toxic gases or vapours. Mechanical ventilation may be provided to improve the air quality in the space. Or workers may be required to use particular tools or protective equipment.

The employer should designate a trained and competent person to evaluate the hazards and recommend control options.

A qualified person must prepare a hazard assessment for each confined space (or group of similar spaces) and for the work activities to be performed. The qualified person must have training and experience in recognizing, assessing, and controlling the hazards of confined spaces.

The employer must have a list of all confined spaces in the workplace. The employer may have the qualified person review the list to ensure all the confined spaces have been properly identified. For each confined space or group of similar spaces, the qualified person will identify potential hazards and assess the likelihood of each occurring.

The hazard assessment must consider conditions that may exist in the confined space (before workers enter) due to the design, location, and use of the confined space. The assessment must also consider the hazards that may develop during work activity in and around the confined space.

The qualified person will prepare a hazard assessment and develop written procedures to eliminate or minimize all the hazards likely to prevail. Once the assessment has been done for a specific activity within a particular space or group of similar spaces, it may provide the basis for procedures for every occasion when workers enter those spaces. (OHS Code Section 44 and 47)

Controlling the Atmosphere

If it is known or shown by pre-entry testing that a confined space does not contain clean breathable air, the hazard must be eliminated or controlled before workers enter the space.

If the confined space has an oxygen-deficient or toxic atmosphere, the first control measure is to replace the atmosphere with air that is safe to breathe. The next step is to ensure the air remains safe while workers are inside. Even if the air tests as clean and breathable, further controls (such as ventilation) may be needed to ensure the atmosphere remains safe.

If the atmospheric testing identifies that a hazardous atmosphere exists or is likely to exist in a confined space, an employer must ensure that the confined

space is ventilated, purged or both, or inerted before a worker enters the confined space. (OH&S Code 53.1)

If ventilating or purging a confined space is impractical or ineffective in eliminating a hazardous atmosphere, the employer must ensure that a worker who enters the confined space uses personal protective equipment appropriate for the conditions within the confined space. (OH&S Code 53.2)

The code of practice must contain a description of when ventilation, purging or inerting are required and the specific procedures and materials to be used.

The control measures depend on the hazard. For example:

- If the atmosphere is oxygen-deficient, be sure the space is clean and replace the atmosphere with clean breathable air.
- If there is, or there is a possibility of a toxic atmosphere from work inside the space, be sure the space is clean, and remove the contaminants and replace the atmosphere with clean breathable air.
- If the atmosphere is explosive or flammable, be sure the space is clean and replace the atmosphere with clean breathable air or fill the space with an inert gas.

The atmosphere must be retested after any of these procedures. The goal is to ensure that the space contains clean breathable air before a worker enters (except in the case of deliberately inerting the atmosphere).

Venting is the opening up of a confined space to allow clean air to enter and circulate without the use of mechanical ventilation. Use of this method as a means of controlling contaminants can be authorized only by a trained and competent person and never for a space with a high or medium-hazard atmosphere.

Ventilating means the active movement of air using mechanical devices, such as air movers, fans, and local exhaust systems to force fresh air into a confined space. It may bring clean air into a space or exhaust contaminated air out of the space. Confined spaces must be continuously ventilated to control hazardous atmospheres, except for certain low-hazard atmospheres, inert atmospheres, and in emergency rescue.

When no contaminants are being generated by existing conditions inside the space, blowing air into the space equivalent to five times the volume of the space will result in approximately 95% of the original air inside the space being replaced, as long as the air is blown in at a high enough speed to mix well with the air inside the space. The specific procedure written into the Code of Practice

will determine the amount of air required to make a confined space safe prior to entry and while workers are inside the space.

If mechanical ventilation is required to maintain a safe work atmosphere within a confined space, the employer must ensure that the ventilation system incorporates a method of alerting workers if the system fails. Workers must be trained in the evacuation procedures to be used if the ventilation system fails. (OH&S 53.4)

Mechanical Ventilation

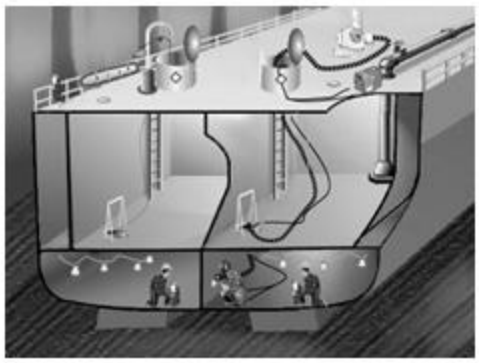

The two main types of mechanical ventilation are:

- Local exhaust ventilation
- General ventilation

Local exhaust ventilation uses exhaust fans or ducts to remove contaminated air at its source before it has a chance to spread throughout a confined space. Local exhaust ventilation is useful where air contaminants are generated from a point source, for example, at a waste sump during welding or during concrete grinding operations. Local exhaust ventilation is generally used to supplement general ventilation.

General ventilation uses mechanical equipment such as fans, blowers, and ducting to deliver clean air into a space or to remove contaminated air from a space. General ventilation is sometimes referred to as “dilution” ventilation or positive-pressure ventilation. When air is blown into a space, air currents are created and the outside air mixes with air in areas that might normally have stagnant air. The faster the air moves, the more air mixing will occur. As the mixed air exits the space, contaminants are carried out.

To ventilate a long space, you may need a ventilator that draws air out at one end and another ventilator that pushes air in at the opposite end. Ventilators that draw air out of a space minimize air currents and therefore reduce the possibility of generating dust.

The minimum air flow for low-hazard atmospheres is 85 cubic metres per hour (50 cubic feet per minute) of clean respirable air for each worker in the space.

Air-Moving Devices

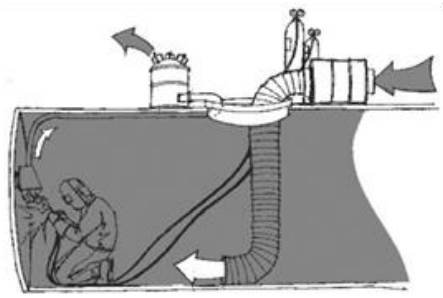

There are two types of air-moving devices commonly used to purge or ventilate confined spaces:

- Fans
- Venturi eductors.

Fans are usually electrically powered and can be divided into two main types: axial and centrifugal. As a general rule, axial fans are used for higher flow rates in systems with lower resistance. Centrifugal fans are used for lower flow rates in systems with higher resistance.

Eductors (also known as air horns, air blowers, and air ejectors) operate with compressed air on the principle of the venturi effect. Eductors have the advantage of fitting into small openings and have no moving parts. Usually, they are unable to move large volumes of air. A sufficient volume of compressed air and enough pressure are needed to achieve rated flow rates.

Natural ventilation

Natural ventilation is ventilation of a space by natural air movement resulting from wind or convection currents. Using natural ventilation is prohibited as a control measure in the following situations:

- If a confined space has a high or medium-hazard atmosphere
- If natural ventilation could draw air other than clean breathable air into the confined space

In limited situations, natural ventilation is acceptable on its own. It is typically used to supplement mechanical ventilation.

The Code of Practice should provide written work procedures that identify where and when natural ventilation can be used to maintain clean breathable air in a low-hazard atmosphere. Under these circumstances, the air flow must be monitored.

In addition to continuously measuring the amount of air that is flowing through the space, workers must continuously monitor the atmosphere using a gas monitor to make sure the space contains clean breathable air.

Purging is removing an unsafe atmosphere from a confined space and replacing it with clean breathable air prior to worker entry. This is commonly accomplished by blowing air into the confined space using portable mechanical ventilators.

Purging can also be accomplished by introducing substances such as an inert gas, steam or water to displace or flush out contaminants.

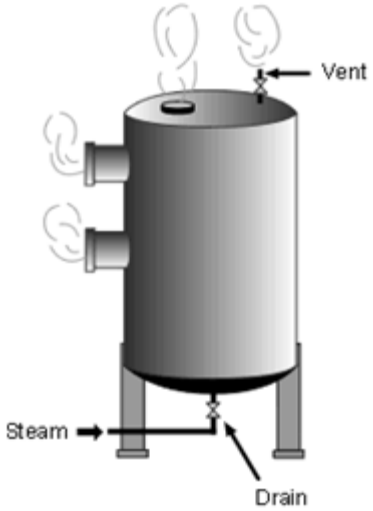

Purging is most effective if there are no contaminants being generated within the space. If there are contaminants, the space must first be cleaned and then purged.

Inerting means the introduction of an inert (unreactive) gas such as nitrogen into a confined space to completely displace all oxygen.

For a flammable mixture to burn or explode, a source of oxygen and a source of ignition are required. Inerting is a technique that is used to remove oxygen from the air.

A confined space with an inert gas is deadly. The following requirements are essential:

- All entry precautions for high-hazard atmospheres must be followed, except the requirement for continuous ventilation.
- Every worker entering the confined space must be equipped with an SCBA or a supplied-air respirator equipped with an escape bottle. Respirators must meet the requirements of the Occupational Health and Safety Regulation, Part 18 Section 244, Personal Protective Equipment.
- The atmosphere inside the confined space must remain inerted while workers are inside.
- In the event the inert blanket is inadvertently lost, all ignition sources must be controlled.
- Escaping inert gas must not cause a hazard outside the confined space.

Common Atmospheric Hazards		
Hazard	**How it occurs**	**Why you should be concerned**
Oxygen deficiency (less than 19.5 % oxygen)	Chemical or biological reactions consume oxygen.	Oxygen-deficient atmospheres affect heart rate, muscle coordination, and breathing. Eventually, they lead to death. Oxygen-enriched atmospheres increase the risk of fire or explosions.
Oxygen enrichment (greater than 23.0 %)	Results from welding tasks and from the improper use of oxygen for breathing air.	
Flammable atmospheres	Fuel, oxygen, and a source of ignition cause fires and explosions.	Flammable gases such as acetylene, butane, propane, hydrogen, and methane are often common in confined spaces. Grain, nitrated fertilizers, and ground chemicals can produce combustible dusts.
Toxic atmospheres	Accumulates through some manufacturing, biological, or chemical reactions. Released during work or tasks such as welding and cleaning.	Many manufacturing processes, stored materials, and work tasks produce toxic gases, vapours, or dusts.
Corrosive atmospheres	Accumulates from some manufacturing processes, biological or chemical reactions.	Corrosive substances destroy living tissue. Some cause immediate damage to skin and eyes; some have no immediate effect but cause cancer with prolonged exposure.

Preventing Fires and Explosions

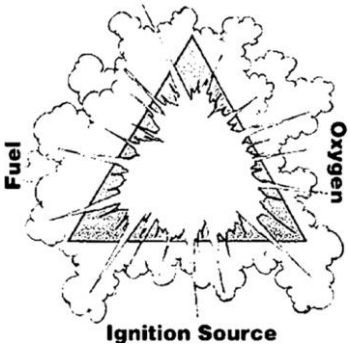

Fire prevention requires control of one or more of the three elements needed for a fire or explosion: flammable substances, oxygen, and a source of ignition.

Preventing Oxygen Enrichment

Air normally contains 20.9% oxygen, enough oxygen for a fire; so, a higher level of oxygen increases the likelihood of material burning. Air is considered oxygen-enriched at levels above 23%. Enrichment can be caused by improper isolation of oxygen lines, ventilation of the space with oxygen instead of air, or leaks from welding equipment. To prevent oxygen enrichment, follow these precautions:

- Isolate the space from any oxygen lines.
- Never ventilate a confined space with oxygen.
- Keep cylinders of oxygen outside the confined space (except for medical emergencies).
- Remove oxyacetylene torches and hoses from the confined space when not in use, whenever practicable.

Controlling Flammable Substances

When a space contains or may contain flammable substances, the qualified person will consider the following when developing the written work procedures:

- Minimizing quantities of flammable materials inside the space at all times.
    - Isolating the confined space from flammable substances
    - Cleaning all flammable residues prior to entry
    - Using non-flammable cleaning solvents where possible
    - Controlling any flammable materials that must be used
    - Keeping cylinders of acetylene, propane, and other flammable gases outside the confined space
- Wetting down spontaneously combustible residues before removal.
- Maintaining the atmosphere as far below 20% of the LEL as possible.
- Checking welding and cutting hoses.
- Removing oxyacetylene welding torches and hose assemblies from confined spaces when not in use, whenever practicable.
- Checking the other side of the surface for other workers or for combustible materials before using a torch or similar welding equipment on walls, bulkheads, etc.

Controlling Sources of Ignition

If flammable substances are present, eliminate or control all sources of ignition.

- Use electrical equipment and lighting approved for hazardous locations classified under CSA Standard C22.1-94, Canadian Electrical Code.
- Use intrinsically safe air-testing and communications equipment, cameras, or any other equipment used in the space.
- Prohibit cigarettes, matches, and lighters.
- Do not use heaters in a confined space.
- Bond steam nozzles and ventilation systems to metal structures and ground the structures.
- Use non-sparking or low-sparking tools. Non-sparking materials include leather, plastic, or wood; low-sparking metals include copper-beryllium alloy, nickel, and bronze.
- Wear non-sparking footwear (that is, no exposed shoe nails).
- Do not use internal combustion engines in the confined space unless these are approved in the written procedures (through the use of appropriate control measures).
- Where practicable, torches and hoses used for welding, brazing, or cutting must be removed.

Isolation of Physical Hazards

Isolation is a process used to stop the flow of energy or any other hazard. When a worker is in a confined space, uncontrolled energy sources and hazardous substances must be prevented from creating a hazard to workers. The consequences of not properly controlling hazards inside of a confined space are often more severe than the failure to control a hazard in a non-confined space situation. It is for this reason that a confined space generally requires isolation that is more effective than normal lockout.

Examples of appropriate controls include blanking or blinding, double blocking and bleeding, misaligning or removing sections of lines, pipes or ducts, controlling all sources of hazardous energy, de-energizing equipment and immobilizing or disconnecting all mechanical linkages. In certain cases, alternate means of isolation and safe work procedures, certified by a professional engineer, may be used to protect workers. (OH&S Sec 49)

Physical hazards must be identified and controlled to make sure the space is safe for workers to enter. An employer must ensure that workers within a confined space are protected against the release of hazardous substances or energy that could harm them. (OH&S 49.1)

The Code of Practice and Hazard Assessment will have identified all physical hazards and will have provided the required precautions and written procedures to control those hazards (including lockout and isolation). The supervisor of the entry must verify that all required precautions are in place before any worker enters a confined space.

There are many types of physical hazards, including crushing hazards, heat and cold stress, radiation, vibration, and noise. Confined spaces with a hazard of entrapment or engulfment and any situations requiring lockout or isolation procedures should be considered a very serious hazard. In these cases, an entry permit is required. A risk of engulfment or entrapment requires the highest level of standby emergency service.

The purpose of isolating a confined space is to keep all hazards away from workers in a confined space. Isolation procedures should protect workers from:

- Entrapment. (Loose and unstable material)
- Moving parts of machinery.
- Substances entering through piping.
- Electrical shock.
- Stored Energy.

Entrapment

Whenever there is a danger of entrapment or engulfment, do not enter unless absolutely necessary. If entry is necessary, a competent person must provide a written procedure.

The written procedure should consider the following:

- Inspection prior to entry.
- Use of kickers or probe bars to dislodge bridges and hung-up material prior to entry.
- De-energization and lockout of all operating process equipment inside the confined space prior to entry.
- Isolation and/or lockout prior to entry to prevent engulfment.
- Requirement for lifeline and harness and provision for immediate rescue of a worker in distress.
- Other protective equipment that may be needed, such as personal flotation devices or fall protection.

Where workers could be exposed to danger from falling objects, follow these requirements:

- Schedule work activity so that no worker is working above another.
- Provide suitable protection from overhead hazards.
- Provide workers with safety headgear.

It is the employer's responsibility to provide the required personal protective equipment and ensure that workers are trained to use it. (OH&S Part 18)

Hazardous Energy

Hazardous energy is any electrical, mechanical, hydraulic, pneumatic, chemical, thermal, or other source of energy that could potentially injure a worker. For example, machinery or equipment with moving parts has mechanical energy, and steam in a pipe has thermal energy. All hazardous energy at the location at which the work is to be carried out must be isolated by activation of an energy-isolating device and the energy–isolating device is secured in accordance with OH&S section 214, 215, or 215.1 as designated by the employer.

Confined spaces having any moving parts and electrical power sources must be isolated by locking out and tagging the power source to prevent accidental reactivation.

Lockouts

Lockout means the use of a lock or locks to render machinery or equipment inoperable or to isolate an energy source in accordance with a written procedure. Locks are generally used to prevent the inadvertent startup or movement of machinery and equipment.

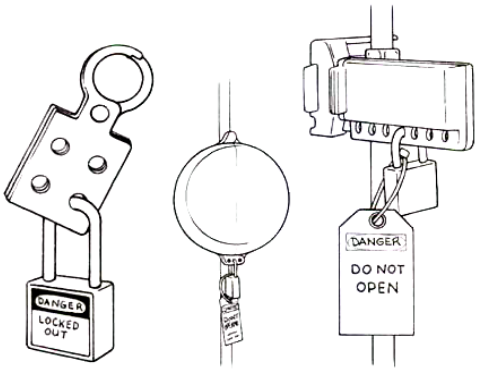

Lockout is a two-step process. The first step is isolation, usually by misaligning a line, setting a switch in the up or down position or closing a valve. The second step is to affix a lock to the isolating device in order to prevent others from removing or changing the isolation. Affixing a personal lock is a very important step to ensure that the device controlling the energy or other hazard remains in its set state or position.

To ensure that there is no inadvertent release of energy or energization, the energy isolating device(s) must be physically secured in the isolating position. A securing device is anything such as a personal lock that holds an energy-isolating device in its off or safe position. The device must be "positive", meaning

that once secured into position, it cannot fall off or allow the energy-isolating device to move from its off or safe position. A dowel rod placed in a valve handle, duct tape across a circuit breaker or a sign placed above a box containing fuses that have been removed form an electrical panel would not be “positive” securing devices.

The securing device or mechanism must be strong enough to withstand inadvertent opening without the use of excessive force, unusual measures, or destructive techniques e.g. metal-cutting tools.

The employer’s lockout program will outline the procedures required to make each confined space in the workplace safe to enter. The supervisor of the entry must ensure that all lockout precautions are in place before a worker enters a confined space. An entry permit is required for all spaces that require lockout. Part 15 of the Occupational Health and Safety Code lists when lockout is required and the required lockout procedures.

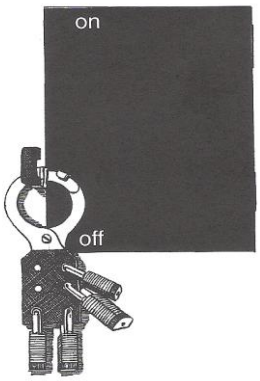

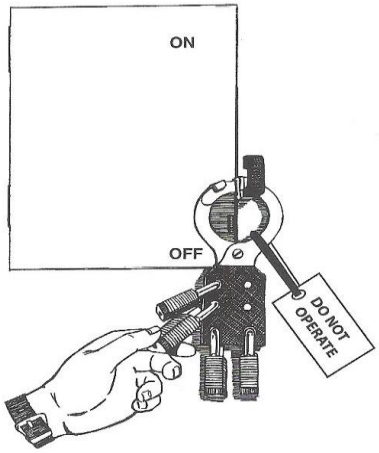

OH&S 214(1**)** Once all energy-isolating devices have been activated to control hazardous energy in accordance with section 212(1), an employer must ensure that a worker involved in work at each location requiring control of hazardous energy secures each energy-isolating device with a personal lock.

OH&S 214(2) Once each energy-isolating device is secured as required by subsection (1), the worker must verify that the hazardous energy source has been effectively isolated.

OH&S 214(3) If more than one worker is working at each location requiring hazardous energy to be controlled,

a) each worker must attach a personal lock to each energy-isolating device, and

b) the first worker applying a lock must verify that the hazardous energy source has been effectively isolated.

Disconnecting and misaligning a Pipe

Isolating includes disconnecting a pipe, which can be done by removing the bolts that hold the pipe flanges together or by loosening unions that connect threaded pipe sections. If the piping will be left disconnected, the sections of the pipe that have been disconnected also must be misaligned to prevent overflow material from getting into the space.

Blanking/Blinding

Blanking involves inserting a physical barrier through the cross-section of a pipe so that materials are prevented from flowing past that point. Blinding involves disconnecting a pipe and attaching a physical barrier to its end so that materials are prevented from flowing out of the pipe.

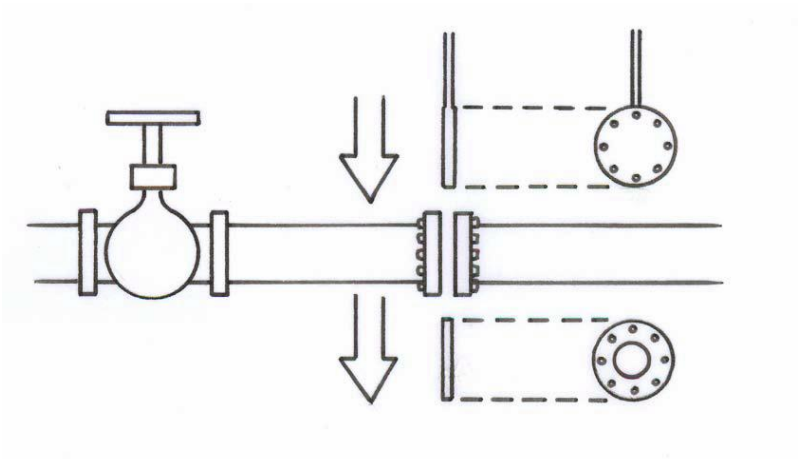

A blank or blind must be:

- Designed with an allowance for corrosion if it will be used in conditions where it can corrode.
- Stamped with its pressure rating or otherwise indicate its pressure rating.

When necessary to prevent leakage, install gaskets on the pressure side of a blank or blind. Flanges must be tightened.

Generally, isolation is achieved by severing or blocking all product lines leading to and from the confined space. The following pages outline a few different techniques.

Typically, a “spectacle” (as shown in the following diagram) is used as a visual indication that a blank has been installed.

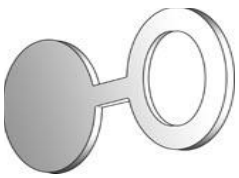

Double Block and Bleed

Double blocking and bleeding involve use of a three-valve system where a pipe has two closed valves and an open drain valve positioned between them so that material is prevented from flowing and is re-directed in case of a valve leak. The valves of a double block and bleed system need to be locked. Block and lock the valves on either side of the drain valve. Lock the main valves closed and the drain valve open.

You may use a double block and bleed system if the harmful substance in the piping is not one of the following:

- A gas
- A vapour
- A liquid volatile enough to produce a hazardous concentration of an air contaminant from the discharge from the piping.

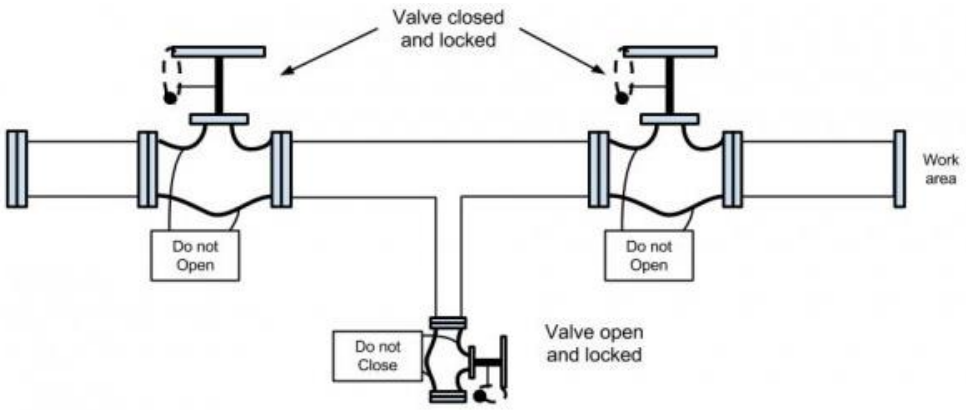

Removal of a Valve or 'Spool Piece'

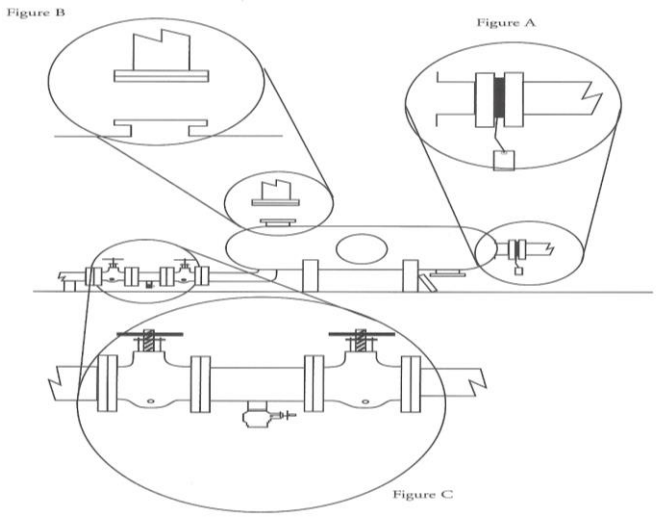

Electrical Shock

Electrical tools and equipment used in a confined space must be grounded or double-insulated and so marked. If wet or damp conditions exist inside the confined space, electrical tools and equipment must be protected by an approved ground fault circuit interrupter or other acceptable means of protection. It is always better to substitute equipment that will not be hazardous inside the confined space.

Pneumatic Tools

In some cases, the potential for electrical hazards can be eliminated by substituting pneumatic equipment such as air-driven grinders and sanders. If these pneumatic tools present a risk of exposure to hazardous contaminants from the exhaust, the compressor system must be located in an area where the exhaust will not contaminate the air inside the space.

If other utility lines are being used adjacent to the confined space (for example, lines containing gases such as nitrogen, acetylene, or oxygen), precautions must be taken to prevent the pneumatic tools from being attached to those lines.

Grounded Tools

Properly grounded hand tools are equipped with a means of directing a ground fault back to the service entrance panel where it will blow a fuse or trip a circuit breaker. If properly grounded tools are not used, the resulting shock could be severe or even fatal.

Double-Insulated Tools

Double-insulated tools are housed in a non-conductive plastic casing with a non-conductive on-off switch, which prevents the operator from coming in contact with any metal parts.

Ground Fault Circuit Interrupter (GFCI)

A ground fault circuit interrupter is a type of circuit breaker that detects any difference (greater than 5 milliamps) between the current being supplied to a tool and the current that returns from the tool. If this difference is detected, the circuit breaker shuts off the flow of electricity. If the difference between the flow of electricity to and from the tool was because it was passing through a person, the person would be protected from any further current flowing through them by the ground fault circuit interrupter.

Do not disconnect the tool from the GFCI because it keeps on tripping (sometimes called “nuisance trips”). The GFCI IS operating properly. The reason for the GFCI “tripping” can usually be traced to electrical devices in need of

repair, including the extension cords, or the tool or cord is being used in a wet or damp location.

A three-pronged plug or the wider spade terminal on the machinery/tool or the extension cord plug ensures that ungrounded devices (such as double insulated tools) are plugged in with the correct polarity. Never remove the ground pin (third prong) from the cord of a tool or three prong extension cord. This ground pin provides grounding protection and it also ensures that double insulated tools are plugged in with the correct polarity.

Electrical tools and equipment used in a confined space where flammable or explosive gases, vapours, or liquids are present must be CSA-approved for hazardous locations classified under CSA Standard C22.1-94, Canadian Electrical Code Part 1, as Class I, Division 2, Groups A, B, and C.

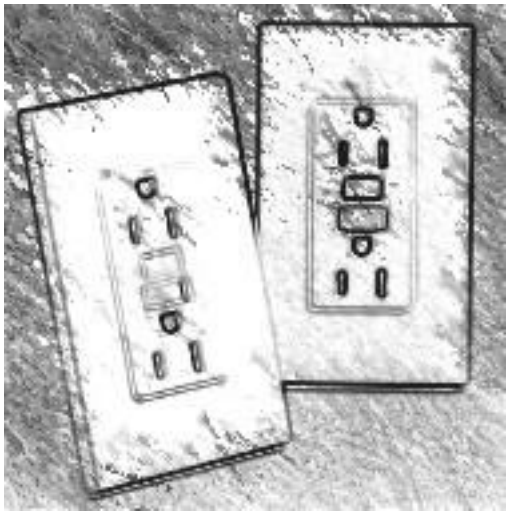

Personal Protective Equipment

The competent person who prepares the hazard assessment and written work procedures will specify the personal protective equipment ("PPE") needed for each confined space (or group of similar spaces) and for the work activities that occur there. There may be different PPE requirements for workers inside the confined space, rescue workers, and tending workers.

General requirements for personal protective equipment include the following:

- All equipment must be used and maintained in accordance with the manufacturers' instructions. Equipment must be inspected regularly and kept in good working order.
- Workers must be instructed and trained in the use, limitations, and assigned maintenance duties of personal protection equipment so that they can use the equipment correctly.

If the hazard assessment required by section 7 of the OHS Code indicates that PPE is required, the employer must ensure that workers wear and use the required PPE properly. Ensuring that workers have and wear their PPE is not enough. The employer must ensure that the PPE is used properly.

The OHS Code requires employers to provide PPE in a limited number of situations where, for example, there is a breathing hazard or where noise exposure limits are exceeded. This section does not require employers to provide PPE such as hard hats, safety boots, flame resistant clothing or eye protection. Where such equipment is necessary the employers must make sure that workers use it. (OHS 228.1)

Personal Respirators (OH&S 245.1)

If clean breathable air in a confined space cannot be assured before workers enter, or if it cannot be maintained while workers are inside, the employer must provide the appropriate respirators for workers to safely enter and remain in the space.

Respirators are to be used only if it is impracticable to provide clean breathable air or if the confined space has an inert atmosphere. In these situations, workers rely on respirators either to remove contaminants from the air they inhale or to provide a safe source of air.

If a respirator is required, the written work procedures must specify the type needed.

All workers entering the space must wear the appropriate respirator.

A respirator with a filter removes particles from the air. Different classes of filters are available for different types of dusts and fibres.

A respirator with a cartridge will remove gases and vapours to “clean” the air. There are different cartridges for different contaminants. The worker must have the right cartridge for the contaminant. Not all gases can be “cleaned” by a cartridge respirator.

Breathing Apparatus

An air-supplied respirator provides clean breathable air. These must be used when the atmosphere is oxygen-deficient or when filters or cartridges are not able to remove the contaminant to a safe level. There are two common types of breathing apparatus;

1. Supplied Air Breathing Apparatus (SABA)
2. Self-Contained Breathing Apparatus (SCBA)

Supplied Air Breathing Apparatus (SABA)

Self Contained Breathing Apparatus (SCBA)

OH&S Subsection 228(2) states that workers have several obligations. Workers must use PPE according to the training and instruction they receive. Workers must inspect PPE prior to use and not use PPE found to be in a condition that makes the PPE unsuitable for use. For example, if a worker required to use a self-contained breathing apparatus (SCBA) cannot get a good facial seal because the face piece is too small, the worker must not use the apparatus. Subsection 14(2) of the *OHS Regulation* requires workers to report this situation to the employer so that it can be corrected.

The CSA Standard requires that workers who use respirators be free from any physiological or psychological condition that may prevent them from using a respirator. In other words, the worker must not have a medical condition that, when combined with respirator use, could endanger his or her health and safety at the worksite.

Evaluation of a worker's medical fitness to wear a respirator must be done before the worker is fit tested. (OHS 251) The evaluation should be appropriate to the level of respirator use and take into consideration.

a) the type of respirator being used,

b) the type and concentration of contaminant the worker will be exposed to,

c) the amount of time that the respirator must be worn, and

d) the activities the worker must do while wearing a respirator.

Section 7: Safety and Protection – Generally

This section discusses the general personal protective equipment required for working in confined spaces.

Learning Objectives:

1. Become familiar the different PPE required for working in confined spaces

OH&S Section 48 outlines that an employer must ensure that all equipment to safely perform confined or restricted space work, including personal protective equipment and rescue equipment, is available and inspected to ensure it is in good working order. All workers must follow the code of practice for confined space and use the equipment as necessary to protect their health and ensure their safety.

If workers inside a confined space could become trapped or if a harmful atmosphere could prevent them from escaping without help it is recommended that the worker wear a full-body harness attached to a lifeline that is tended by a safety watch.

Lifelines can present a danger if they get tangled around equipment or wrapped around a protrusion in a confined or restricted space. Lifelines, in the event that they are required, may only be used in a manner that does not endanger a worker by creating another hazard.

Workers within a space must be able to effectively communicate amongst themselves (where necessary) and communicate with workers outside the confined or restricted space using a system that is appropriate to the hazards within the confined or restricted space e.g. communication equipment that functions in the presence of hazardous gases. Protective equipment should offer the appropriate protection for the job at hand while being comfortable.

Other PPE to Consider

- Safety Boots
- Gloves
- Eye Protection
- Hard Hat
- Hearing Protection
- Fire Retardant Coveralls

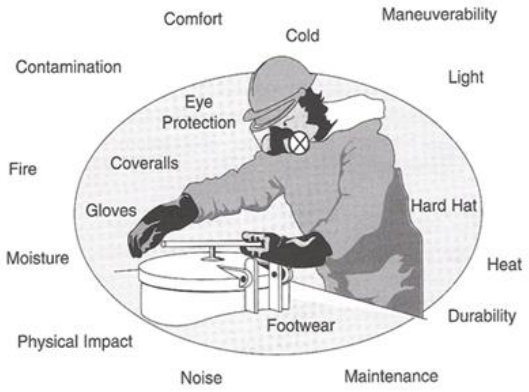

Other considerations for wearing the appropriate equipment for the job include:

- Extremes of heat or cold temperatures.
- Noisy surroundings.
- Potential chemical contact.
- Potential ignition from welding, etc.
- Extremes of dryness or wetness.

Section 8: Safe Entry Permit

This section discusses the general personal protective equipment required for working in confined spaces.

Learning Objectives:

1. Understand what is meant by the phrase confined space entry permit
2. Understand the purpose of an entry permit
3. Understand when an entry permit is required
4. Understand the items the entry permit must address
5. Become familiar with the factors that can lead to an ineffective permit system
6. Become familiar with the worker's role as it pertains to the entry permit
7. Become familiar with the employer's role as it pertains to the entry permit

A confined space entry permit is a requirement of the OH&S Code. It is a document that sets out the work to be done and the precautions to be taken in the identified confined space. In some ways it functions as a safety checklist to make sure that nothing is overlooked. An entry permit is not required for restricted spaces.

The purpose of an entry permit is to formalize entry into a confined space. A permit also informs workers of the hazards and entry procedures and keeps a record of workers who have entered.

The permit must be posted at the entrance to the confined space, verifying that a review of the requirements has been conducted. Depending on the sophistication of the confined space entry program, information on specific work procedures may be stored in a database designed to automatically insert the information into an entry permit for the specific confined space.

The Occupational Health and Safety Regulations require an entry permit when:

- There is a high-hazard atmosphere.
- Lockout or isolation procedures are required.
- There is a hazard of entrapment or engulfment.

The entry permit must (section 47 OH&S Code) address the following:

1. The identification of all hazards
2. List the name of each worker who enters the confined space and the reason for their entry,
3. Provide the location of the confined space,
4. Specify the time period for which the entry permit is valid,
5. The work being done in the confined space, and therefore the safety precautions that must be taken, including isolation and safe work procedures, and
6. Any code of practice requirements for entering, being in and leaving the confined space.

The completed permit must be kept readily available. In some situations, and circumstances, better practice is to have the permit posted at each entry point into the confined space.

An entry permit will cover a specific task or project, which may occur over a number of shifts. The time for which the entry permit is valid is based on the estimated time to complete the project's work activities and must be identified on the permit.

Some employers use the permit as a means of displaying and/or recording additional information, such as:

- Air monitoring results, including the tester's initials
- Lockout procedures
- The ventilation equipment and the air flow required
- The required air-testing equipment and contaminants that must be monitored

An entry permit should be treated as expired sooner than the stated expiry time if one of the following occurs:

- The confined space is returned to service,
- Continuity of responsible supervision for the confined space is broken, or
- The task or project is interrupted for a significant time because of an incident that affects the confined space, e.g. an emergency or breakdown of equipment.

Once an entry permit has expired, a new permit must be issued before entry into the confined space is allowed.

If an employer performs a hazard assessment of a representative sample of identical confined spaces, then a single-entry permit can be used for these and any additional identical confined spaces. (OH&S Code section 45).

Ineffective Work Permits

Various drawbacks exist which can lead to an ineffective Permit system. Some examples are:

- The format of the Permit does not conform to the task to be completed.
- The workers responsible for signing the permit has not inspected the job to ensure that the isolation, lockout or testing has been completed.
- The workers are not following or understand the requirements of the Permit.
- The employer is not enforcing or monitoring the Permit system.
- Permits are prepared too far in advance, after the work has commenced, or by workers not trained in Confined Space Entry requirements.

Figure 2 shows an example of a typical confined space entry permit.

Figure 2: **Code of Practice Work Sheet**

Date: _____

Company Name: _____

Work Site: _____

Confined Space Location: _____

Confined Space Identification Number: _____

Code of Practice Prepared By: _____

Name: _____Telephone Number: _____

Description of the Confined Space:
Task to be Completed in the Confined Space:
Description of Hazards: Atmospheric_____ Safety_____ Work Procedures_____ Human Factor_____

Worker Training Requirements:

How many workers are required to complete the work:_____

Describe worker training requirements/courses_____

_____

_____

_____

_____

Entry Permit:

Attach sample form.

Work Procedures:

1. Testing the Atmosphere

   Test for_____

   Equipment_____

   Equipment calibration_____

   Test Frequency:

   Before Entry_____

   During Entry_____

   After Entry_____

Other_____

_____

_____

_____

_____

_____

2. Entry into the confined space

Who is authorized to enter?

_____

_____

_____

_____

_____

_____

_____

Entry/exit procedure:

_____

_____

_____

_____

_____

_____

_____

3. Description of work to be done in confined space:

_____

_____

_____

_____

_____

_____

_____

4. List of required tools and equipment:

_____

_____

_____

_____

_____

_____

_____

_____

5. Required personal protective equipment:

Respiratory Protective Equipment	❒	Type_____
Protective Clothing	❒	Type_____
Footwear	❒	Type_____
Headwear	❒	Type_____
Protective Eyewear	❒	Type_____
Gloves	❒	Type_____
Other	❒	Type_____

If other describe_____

_____

_____

_____

_____

_____

_____

_____

6. Traffic Hazards

	Yes	No
Are there any traffic hazards related to this confined space entry?	❒	❒

If yes, describe controls_____

_____

_____

_____

_____

_____

_____

_____

_____

_____

Ventilation, Purging, Inerting, Isolation

	Yes	No
Ventilation	❒	❒

If yes, describe controls_____

_____

_____

_____

_____

_____

_____

_____

_____

_____

Purging

Yes	No
❒	❒

If yes, describe controls to be used:

_____

_____

_____

_____

_____

Inerting:

Yes	No
❒	❒

If yes, describe controls to be used:

_____

_____

_____

_____

_____

Isolation:

Yes	No
❒	❒

If yes, describe controls to be used:

_____

_____

_____

_____

_____

_____

_____

Tending Worker

	Yes	No
Is a tending worker required to be physically present?	❒	❒

If no, who has the responsibility to be in communication with the workers in the confined space?

_____

_____

_____

_____

What are the duties of the tending worker(s)?

_____

_____

_____

_____

_____

What actions do the tending worker(s) take in an emergency?

_____

_____

_____

_____

_____

Describe communication procedures:

_____

_____

_____

_____

_____

Emergency Response Procedures:

Emergency Contact Numbers:

_____ _____

_____ _____

Describe emergency procedures:

_____

_____

_____

_____

_____

_____

List of Rescue equipment (including PPE for rescue workers):

_____

_____

_____

_____

_____

_____

Required training and recordkeeping procedures:

_____

_____

_____

_____

_____

_____

_____

Recordkeeping:

Code of Practice reviewed by_____

Code of Practice update frequency_____

When is the confined space entry done? _____ Frequency: _____

Describe incidents that have occurred in connection with this confined space entry:

_____

_____

_____

_____

Has emergency rescue been required during an entry?

_____

_____

_____

_____

Actions taken to prevent future incidents:

_____

_____

_____

_____

Other comments:

_____

_____

_____

_____

_____

While Figure 2 shows the basic requirements of a safe entry permit it is encouraged to expand the scope of a permit system to include the following:

- An assessment of all associated hazards for each job being performed.
- Vessel risk classification.
- Lockout/tag out procedures used to isolate potential hazards and a copy of the completed forms.
- Indications of the current atmosphere including time of testing.
- Any special procedures such as equipment jog tests or personal gas test monitors required.
- Identify safe work procedures.
- Emergency procedures.
- An indication of who is responsible to perform each task.

Each worker should insure that he/she has:

- Reviewed the permit for completeness prior to entry.
- Ensured that the Tending Worker is aware of their responsibilities.
- Ensured that the Tending Worker is aware of each worker entering the space.
- A thorough understanding of the safe work procedures to be followed during the entry.
- Has signed a form indicating that they have reviewed all of the above.

Each employer or employer representative must ensure that:

- The Permit is completed prior to the work beginning.
- That all safety precautions are fulfilled.
- That the permit is explained to the work crew and signed by each worker.
- That all the workers are competent in the job to be performed.
- That the Permit is returned and filed for future reference after the job is completed.

Section 9: Tending Worker

This section discusses the role and responsibilities of the tending worker.

Learning Objectives:

1. Understand the role of the tending worker
2. Understand the responsibilities of the tending worker

With proper communication, work in a confined or restricted space is made easier, safer and in many cases, more productive. Care must be taken when selecting communication equipment for this unique work environment. Confined and restricted spaces are very different from any other work area and must be treated accordingly.

For every confined space entry, a worker must be assigned as a tending worker, who monitors the well-being of workers inside the space by visually observing them or using another method of checking. The tending worker also summons help in the event of an emergency. Workers inside the space must be able to contact the tending worker at any time, either through voice or visual contact. The tending worker must be stationed outside the confined space, never inside.

The location and functions of the tending worker differ, depending on whether the hazard assessment gave the atmosphere a hazard rating of low, moderate, or high.

As required by OH&S subsection (3), a tending worker – a competent worker trained in the evacuation procedures in the emergency response plan and who is present outside the confined space, at or near the entrance – is required under the following four conditions:

a) the oxygen content of the atmosphere inside the confined space is less than 19.5 percent by volume;

b) the oxygen content of the atmosphere inside the confined space is greater than 23.0 percent by volume;

c) the concentration of a substance listed in Table 2 of Schedule 1 inside the confined space is greater than 50 percent of its occupational exposure limit; or

d) a hazard other than one listed in clauses (a), (b) or (c) is identified by the hazard assessment and the hazard cannot be eliminated or effectively controlled.

The role of the tending worker is to monitor the safety of the person(s) working inside the confined space and to take action if an emergency arises. OH&S Subsection 56 (4) states that this tending worker must:

- ✓ keep track at all times of the number of workers inside the confined space,
- ✓ be in constant communication with the workers inside the confined space,
- ✓ have a suitable system for summoning assistance, and
- ✓ not leave the area until all workers have left the confined space, or another tending worker is in place.

If the conditions, a through d listed above, do not apply to a particular confined space, then a tending worker as described above, having the duties described above, is not required.

Instead, as required by subsections 56(1) and 56(2), a competent worker designated by the employer must be in communication with the worker in the confined space. In some cases, this designated worker may be in a nearby vehicle, or may be at a central dispatch location.

Communications

The tending worker designated by the employer must have a suitable system for summoning assistance in the event of an incident or emergency.

Radio signals do not penetrate metal or concrete reinforced with re-bar, which describes a majority of confined or restricted space environments, creating dead spots or reducing signal strength. Messages can become garbled or are not received. This prevents continuous communication in certain types of spaces.

Radio equipment is extremely effective when used by safety attendants outside spaces to maintain contact with their base or, in the event of a problem, to call for rescue assistance.

The preferred choice for reliable communication in confined or restricted spaces is a hardline full duplex system, which allows hands-free communication between a tending worker and workers inside the space.

No matter which method of communication is chosen, the equipment selected should be suited to the particular work environment. It should be extremely rugged, resistant to chemicals, environmentally sealed and intrinsically safe if used in a potentially hazardous location.

The Tending Worker must be Knowledgeable in…

- ✓ The Emergency Response Plan.
- ✓ The Communications Procedures.
- ✓ The Safe Operating Procedures.
- ✓ The Scope of Work for the job at hand.
- ✓ The number of workers in the space, and their locations.

The Tending Worker must…

Be thoroughly understood the Safe Entry Permit and all related requirements.

- ✓ Stay alert at all times.
- ✓ Remain at the designated entrance.
- ✓ Check with the workers at regular intervals.
- ✓ Watch for potential hazards both inside and outside the confined space and alert worker inside as needed.
- ✓ Maintain and entry log.
- ✓ Be able to sound an evacuation alarm.

If a Rescue is Necessary, the Tending Worker must…

- ✓ Initiate the Emergency Response Plan.
- ✓ Stay outside the confined space until the backup arrives.
- ✓ Give assistance to emergency responders and victims are required.

The Entry Log

The Tending Worker should keep track of all workers that move in and out of the confined space. Usually a log book or sheet is kept by the Tending Worker. This document identifies and records the workers names and contact information as well as the ongoing atmospheric tests.

CONFINED SPACE ENTRY LOG	
DATE:	LOCATION:
WORKER NAMES (Please Print and Initial)	
1.	6.
2.	7.
3.	8.
4.	9.
5.	10.
Tending Worker:	
Crew Leader:	

	# of Workers		Time (am/pm)		**OXYGEN 21% Is ideal**	**FLAMMABLE LEL & UEL**	**TOXICITY % OR PPM**	**Temp. C or F**
	IN	**OUT**	**IN**	**OUT**				
1.								
2.								
3.								
4.								
5.								
6.								
7.								
8.								
9.								
10								

Section 10: Emergency Response

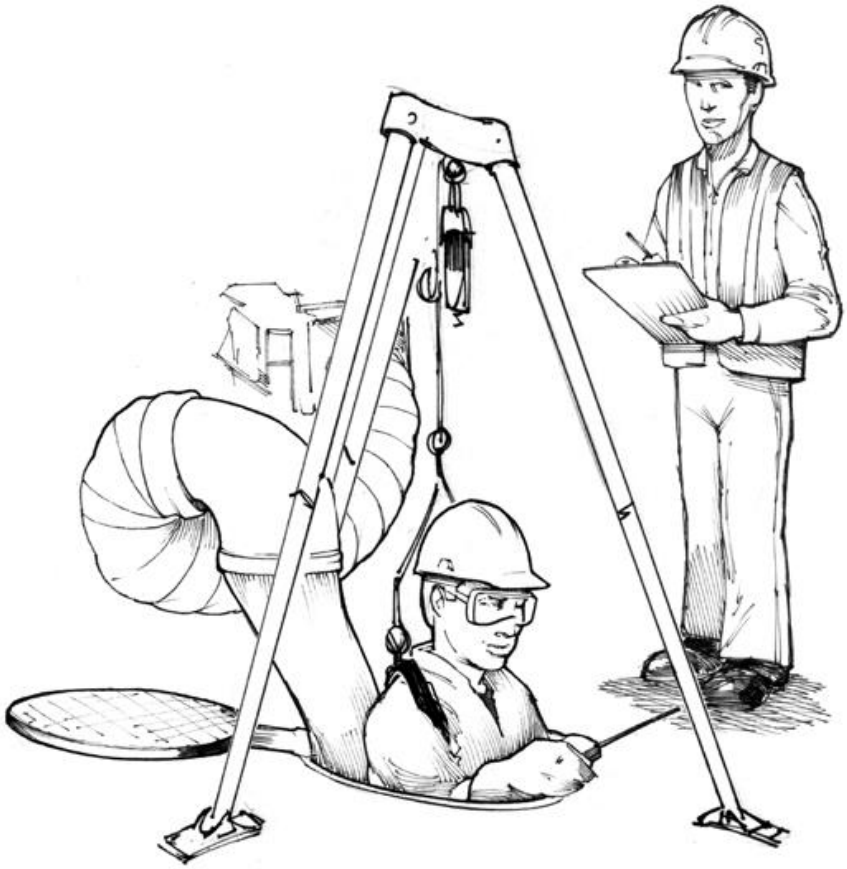

This section discusses the requirement for emergency response and some of the elements of an emergency response.

<u>Learning Objectives:</u>

1. Become familiar with the requirement for an emergency response as it pertains to a confined space
2. Become familiar with the various roles and responsibilities within an emergency response

OHS 55(1) states that **"**An employer must ensure that a worker does not enter or remain in a confined space or a restricted space unless an effective rescue can be carried out." Furthermore, it goes on to state in 55(2) that "A worker must not enter or stay in a confined space or restricted space unless an effective rescue can be carried out."

Before work in a confined or restricted space is allowed, the employer must have an effective emergency response plan in place. In the event of an emergency, workers must be able to carry out an effective rescue and workers must be able to immediately evacuate a confined or restricted space if conditions warrant. (OHS 55.3)

Comments on the Use of 911 for Rescue

In the case of rescues involving workers in confined spaces and workers suspended in the air after a fall, calling 911 alone and awaiting the arrival of rescue services personnel is considered to be an insufficient emergency response. The employer must have some basic level of on-site rescue capability in the event that rescue services personnel are delayed or unable to attend the scene.

In some situations, rescue services personnel may not have the equipment or skills to perform a rescue e.g. a worker in a confined space deep below ground level in a horizontal tunneling operation or a worker suspended 100 metres above ground level following the failure of a swing stage scaffold. In such cases, the employer's on-site rescue capability must be such that the work site is virtually self-sufficient in returning a rescued worker to the surface or ground level.

The Trained Rescue Team

Some employers believe that having a good rescue team is the most important part of a confined space entry program. A rescue team and rescue procedures should not be used as a substitute for making a confined space safe to enter. It is essential that the air is safe to breathe before entry so that a rescue team is not required, except for serious injuries or medical emergencies.

Studies have shown that over 60% of confined space deaths occur among would-be rescuers. Rescue plans and proper training for rescuers must be in place before any confined space entry. This will prevent well-meaning workers who are untrained in rescue from entering confined spaces to assist workers in distress and themselves becoming victims.

The employer must provide for the services of rescue persons when a worker enters a confined space. If the rescue persons are employees of another firm or an agency, there should be a written agreement detailing the services to be provided.

A rescue plan includes practicing the plan. This helps to ensure that personnel, equipment, and procedures are in place to affect rescue. The written rescue plan provides a step-by-step means of ensuring all possibilities are considered. Practicing the plan provides information about where improvements must be made. For example, the plan may state that a gurney will be used to remove

workers from a confined space. Practice may reveal that the stretcher will not fit into the space, the workers cannot lift the injured worker from inside the space, or the winch apparatus needs to be replaced. The more often the rescue plan is practiced, the less likely something will go wrong if a rescue is required. A practice drill should be held at least once each year.

Every person assigned rescue duties must be properly equipped and adequately trained to carry out these duties. Proper safety procedures and planning are key elements of a confined space entry.

The supervisor of the entry, or the tending worker, must notify rescue personnel of work to be done before a worker enters a confined space. If more than one confined space is to be entered at the same time, rescue personnel need to know this and be on alert status.

Employer

The employer must ensure that rescue personnel are monitoring any signaling system that will be used to summon them in an emergency. The employer must ensure rescue procedures include every possible means of eliminating, controlling, or reducing the risk to emergency personnel, including the use of mechanical ventilation.

All employers are responsible for the provision of first aid equipment, supplies, facilities, and services, as determined by an assessment that would meet the requirements of the Occupational Health and Safety Regulations.

Person directing the rescue

The person who directs the rescue or evacuation must be adequately trained in such procedures and must be in voice communication at all times between the person directing the rescue and the workers who are performing the rescue.

Rescue workers

Trained rescue workers will know how to conduct a rescue and will consider the following:

- Additional workers located outside to assist
- Rescue from the outside (if possible)
- Requirements for use of a safety harness and lifeline

Trained rescue workers will also know that if IDLH conditions exist or could develop, they must enter only with an SCBA or supplied-air respirator equipped with an escape bottle. Small-diameter openings will require special consideration for rescue workers who are encumbered with SCBA apparatus.

A key objective is to correct atmospheric hazards prior to entry and supply adequate ventilation to ensure a safe atmospheric environment whenever practicable.

Written procedures for rescue

Written procedures for rescue must be in place before every confined space entry. The procedures will consider:

- All hazards of the space as specified in the hazard assessment
- Possible hazards that may arise during rescue, the appropriate evaluation of these hazards, and control methods recommended by a qualified person
- Dimensions of the space, location of entry and exit points, and obstacles to removing an injured worker
- Rescue equipment required for each space
- Personal protective equipment for rescuers, including appropriate respirators for any contaminants or IDLH conditions
- Communication between workers, rescuers, the supervisor of the entry, and tending worker.
- Procedures to follow immediately after an incident has occurred
- Rescue methods for a worker who is unconscious, unresponsive (on or off of a lifeline), or distressed.

Recommended Emergency Response Procedures

- Activate Emergency Response Plan
- Assess the Situation
- Initiate Rescue
- Provide Basic Life Support
- Transfer to Medical Aid
- Terminate Response
- Debrief

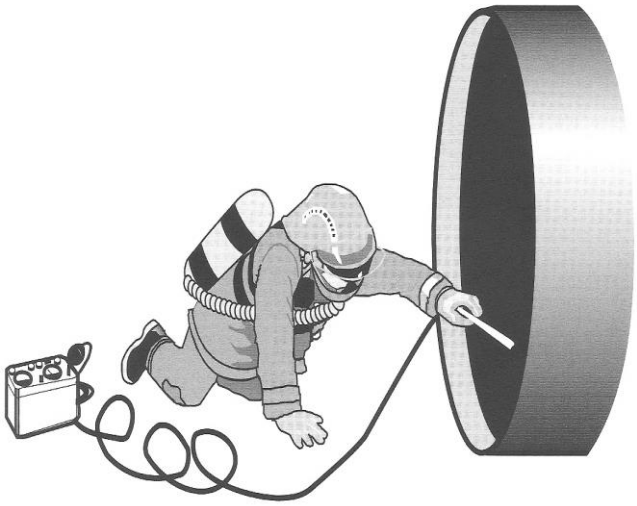

Glossary of Confined Space Terms

Acceptable entry conditions mean the conditions that must exist in a permit space to allow entry and to ensure that employees involved with a permit-required confined space entry can safely enter into and work within the space.

Anchor means an engineered component for coupling a fall arrest or travel restraint system to an anchorage.

Anchorage means a structure, or part of a structure, that is capable of safely withstanding any potential forces applied by a fall protection system.

Attendant means an individual stationed outside one or more permit spaces who monitors the authorized entrants and who performs all attendant's duties assigned in the employer's permit space program.

Authorized entrant means an employee who is authorized by the employer to enter a permit space.

Blanking or blinding means the absolute closure of a pipe, line, or duct by the fastening of a solid plate (such as a spectacle blind or a skillet blind) that completely covers the bore and that is capable of withstanding the maximum pressure of the pipe, line, or duct with no leakage beyond the plate.

Bodily enter means the action by which a person passes through an opening into a permit-required confined space. Entry includes ensuing work activities in that space and is considered to have occurred as soon as any part of the entrant's body breaks the plane of an opening into the space.

Competent in relation to a worker, means adequately qualified, suitably trained and with sufficient experience to safely perform work without supervision or with only a minimal degree of supervision.

Confined space is an enclosed or partially enclosed space that is not designed or intended for continuous human occupancy with a restricted, limited, or impeded means of entry or exit because of its construction and may become hazardous to a worker entering it because of:

(a) an atmosphere that is or may be injurious by reason of oxygen deficiency or enrichment, flammability, explosivity, or toxicity,

(b) a condition or changing set of circumstances within the space that present a potential for injury or illness, or

(c) the potential or inherent characteristics of an activity which can produce adverse or harmful consequences within the space.

Designed for continuous worker occupancy intended as a place of regular work and supplied with ventilation and other conditions necessary to support life.

Direct supervision means under the supervision of a competent worker who is personally and visually supervising the other worker, and able to communicate readily and clearly with the other worker.

Double block and bleed mean the closure of a line, duct, or pipe by closing and locking or tagging two in-line valves and by opening and locking or tagging a drain or vent valve in the line between the two closed valves.

Emergency means any occurrence (including any failure of hazard control or monitoring equipment) or event internal or external to the permit space that could endanger entrants.

Engulfment means the surrounding and effective capture of a person by a liquid or finely divided (flowable) solid substance that can be aspirated to cause death by filling or plugging the respiratory system or that can exert enough force on the body to cause death by strangulation, constriction, or crushing.

Entry means the action by which a person passes through an opening into a permit-required confined space. Entry includes ensuing work activities in that space and is considered to have occurred as soon as any part of the entrant's body breaks the plane of an opening into the space.

Entry permit (permit) means the written or printed document that is provided by the employer to allow and control entry into a permit space and that contains the information specified in the section beginning on page 51 of this manual.

Entry supervisor means the person (such as the employer, foreman, or crew chief) responsible for determining if acceptable entry conditions are present at a permit space where entry is planned, for authorizing entry and overseeing entry operations, and for terminating entry as required.

NOTE: An entry supervisor also may serve as an attendant or as an authorized entrant, as long as that person is trained and equipped as required by the OH&S Code for each role he or she fills. Also, the duties of entry supervisor may be passed from one individual to another during the course of an entry operation.

Hazard means a situation, condition or thing that may be dangerous to the safety or health of workers.

Hazardous atmosphere means an atmosphere that may expose employees to the risk of death, incapacitation, and impairment of ability to self-rescue (that is, escape unaided from a confined space), injury, or acute illness from one or more of the following causes:

1. Flammable gas, vapor, or mist in excess of 10 percent of its lower flammable limit (LFL);

2. Airborne combustible dust at a concentration that meets or exceeds its LFL; *NOTE*: This concentration may be approximated as a condition in which the dust obscures vision at a distance of 5 feet (1.52 m) or less.

3. Atmospheric oxygen concentration below 19.5 percent or above 23.5 percent;

4. Atmospheric concentration of any substance for which a dose or a permissible exposure limit is published in Alberta OH&S Code (2017) Schedule 1 Hazardous Substances and which could result in employee exposure in excess of its dose or permissible exposure limit; *NOTE*: An atmospheric concentration of any substance that is not capable of causing death, incapacitation, impairment of ability to self-rescue, injury, or acute illness due to its health effects is not covered by Schedule 1.

5. Any other atmospheric condition that is immediately dangerous to life or health. *NOTE*: For air contaminants for which OSHA has not determined a dose or permissible exposure limit, other sources of information, such as Material Safety Data Sheets that comply with the Hazard Communication Standard, section 1910.1200 of 29 CFR, published information, and internal documents can provide guidance in establishing acceptable atmospheric conditions.

Hot work permit means the employer's written authorization to perform operations (for example, riveting, welding, cutting, burning, and heating) capable of providing a source of ignition.

Immediately dangerous to life or health (IDLH) means any condition that poses an immediate or delayed threat to life or that would cause irreversible adverse health effects or that would interfere with an individual's ability to escape unaided from a confined space. *NOTE*: Some materials -- hydrogen fluoride gas and cadmium vapor, for example -- may produce immediate transient effects that, even if severe, may pass without medical attention, but are followed by sudden, possibly fatal collapse 12-72 hours after exposure. The victim "feels normal" from recovery from transient effects until collapse. Such materials in hazardous quantities are considered to be "immediately" dangerous to life or health.

Inerting means the displacement of the atmosphere in a confined space by a noncombustible gas (such as nitrogen) to such an extent that the resulting atmosphere is noncombustible. *NOTE*: This procedure produces an IDLH oxygen-deficient atmosphere.

Isolation means the process by which a confined space is removed from service and completely protected against the release of energy and material into the space by such means as: blanking or blinding; misaligning or removing sections of lines, pipes, or ducts; a double block and bleed system; lockout or tagout of all sources of energy; or blocking or disconnecting all mechanical linkages.

Line breaking means the intentional opening of a pipe, line, or duct that is or has been carrying flammable, corrosive, or toxic material, an inert gas, or any fluid at a volume, pressure, or temperature capable of causing injury.

Limited or restricted means for entry or exit Any space where an occupant must crawl, climb, twist, be constrained in a narrow opening, follow a lengthy path or otherwise exert unusual effort to enter or leave, or where the entrance may become sealed or secured against opening from inside.

Non-permit confined space means a confined space that does not contain or, with respect to atmospheric hazards, have the potential to contain any hazard capable of causing death or serious physical harm.

Official text the citation for the official text is Alberta Occupational Health and Safety Code (2017) unless otherwise indicated.

Oxygen deficient atmosphere means an atmosphere containing less than 19.5 percent oxygen by volume.

Oxygen enriched atmosphere means an atmosphere containing more than 23.5 percent oxygen by volume.

Permit-required confined space (permit space) means a confined space that has one or more of the following characteristics:

1. Contains or has a potential to contain a hazardous atmosphere;

2. Contains a material that has the potential for engulfing an entrant;

3. Has an internal configuration such that an entrant could be trapped or asphyxiated by inwardly converging walls or by a floor which slopes downward and tapers to a smaller cross-section; or

4. Contains any other recognized serious safety or health hazard.

Permit-required confined space program (permit space program) means the employer's overall program for controlling, and, where appropriate, for protecting employees from, confined space hazards and for regulating employee entry into confined spaces. The measures necessary for safe entry into one confined space, or type of space, may differ from those required for other spaces. The implementation of a generic program that fails to consider the unique characteristics of a particular confined space could have catastrophic consequences. The confined space program must address each confined space so that entrants receive appropriate protection.

Permit system means the employer's written procedure for preparing and issuing permits for entry and for returning the confined space to service following termination of entry.

Prohibited condition means any condition in a confined space that is not allowed by the permit during the period when entry is authorized.

Rescue service means the personnel designated to rescue employees from confined spaces.

Restricted Space is an enclosed or partially enclosed space, not intended for continuous human occupancy that has a restricted, limited or impeded means of entry or exit because of its construction. It can be thought of as a work area in which the only hazard is the difficulty of getting into or out of the space. All other hazards are either non-existent or have been eliminated or controlled as required by Part 2. Restricted spaces are therefore not subject to the permitting, atmosphere testing and tending worker requirements of a confined space.

Retrieval system means the equipment (including a retrieval line, chest or full-body harness, wristlets, if appropriate, and a lifting device or anchor) used for non-entry rescue of persons from confined spaces. The retrieval system must be available, meaning that the entrant's retrieval line is attached to a mechanical device so that rescue can begin as soon as the rescuer becomes aware that rescue is necessary.

Testing means the process by which the hazards that may confront entrants of a confined space are identified and evaluated. Testing includes specifying the tests that are to be performed in the confined space.

NOTE: Testing enables employers both to devise and implement adequate control measures for the protection of authorized entrants and to determine if acceptable entry conditions are present immediately prior to, and during, entry.

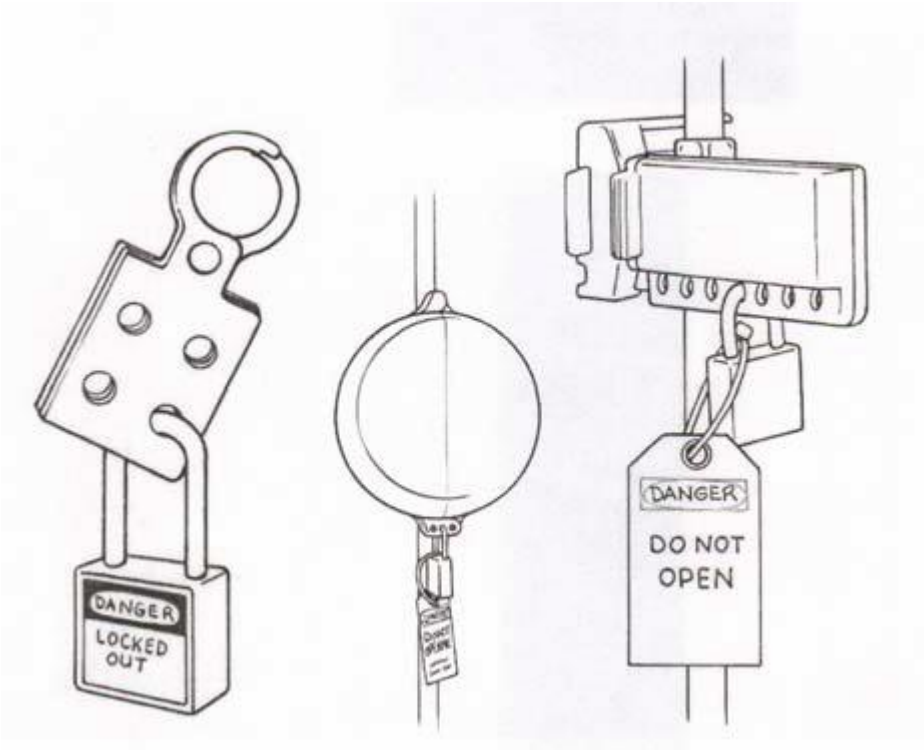

Typical methods of controlling hazardous energy.

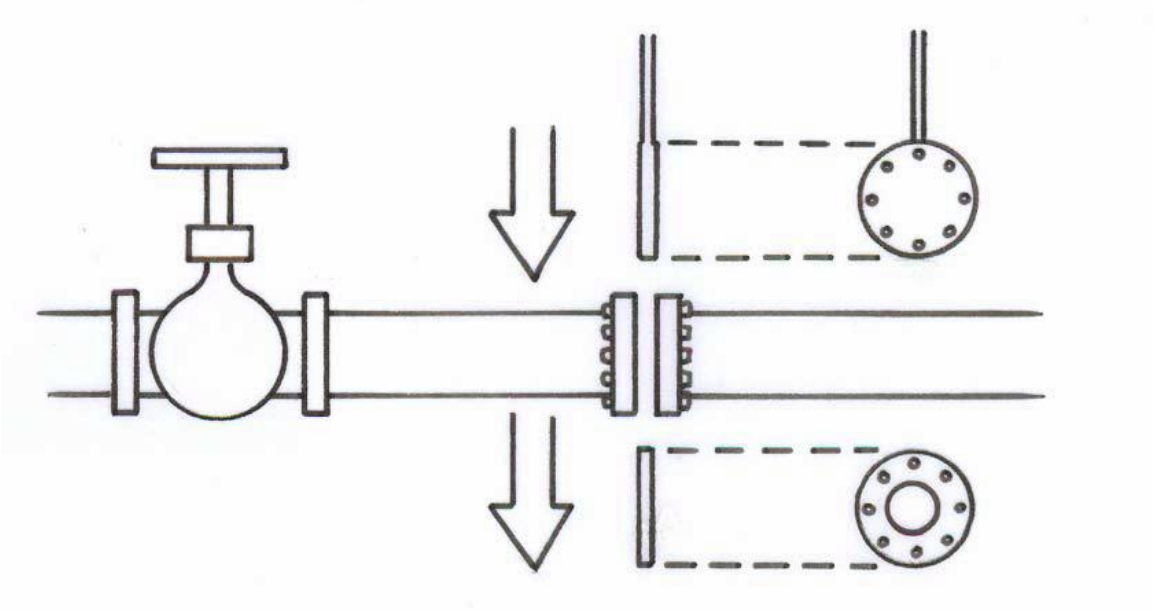

Blanking.

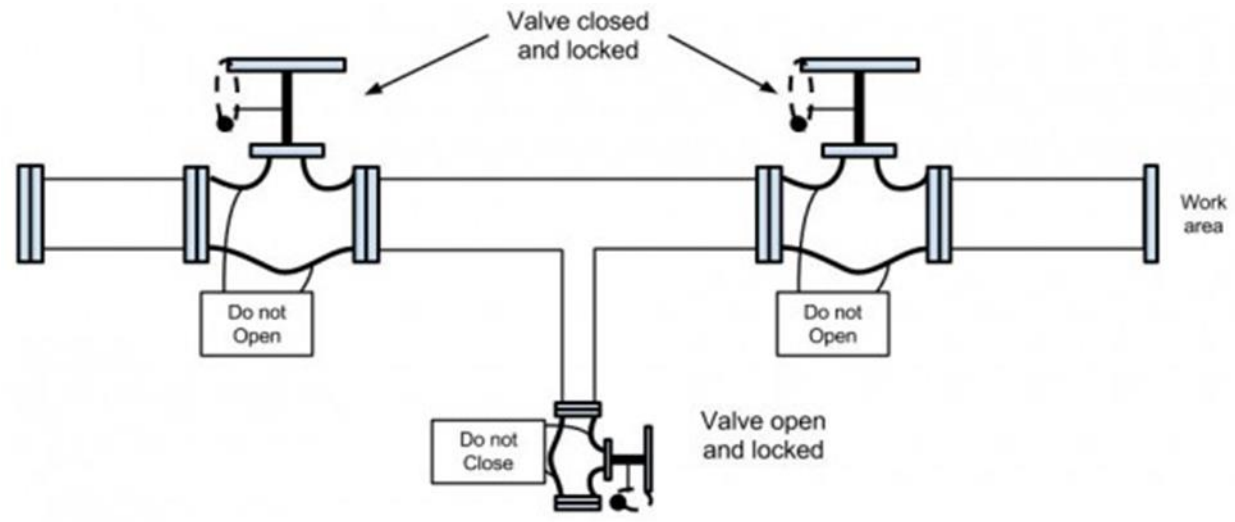

Double block and bleed.

Atmospheric Testing.